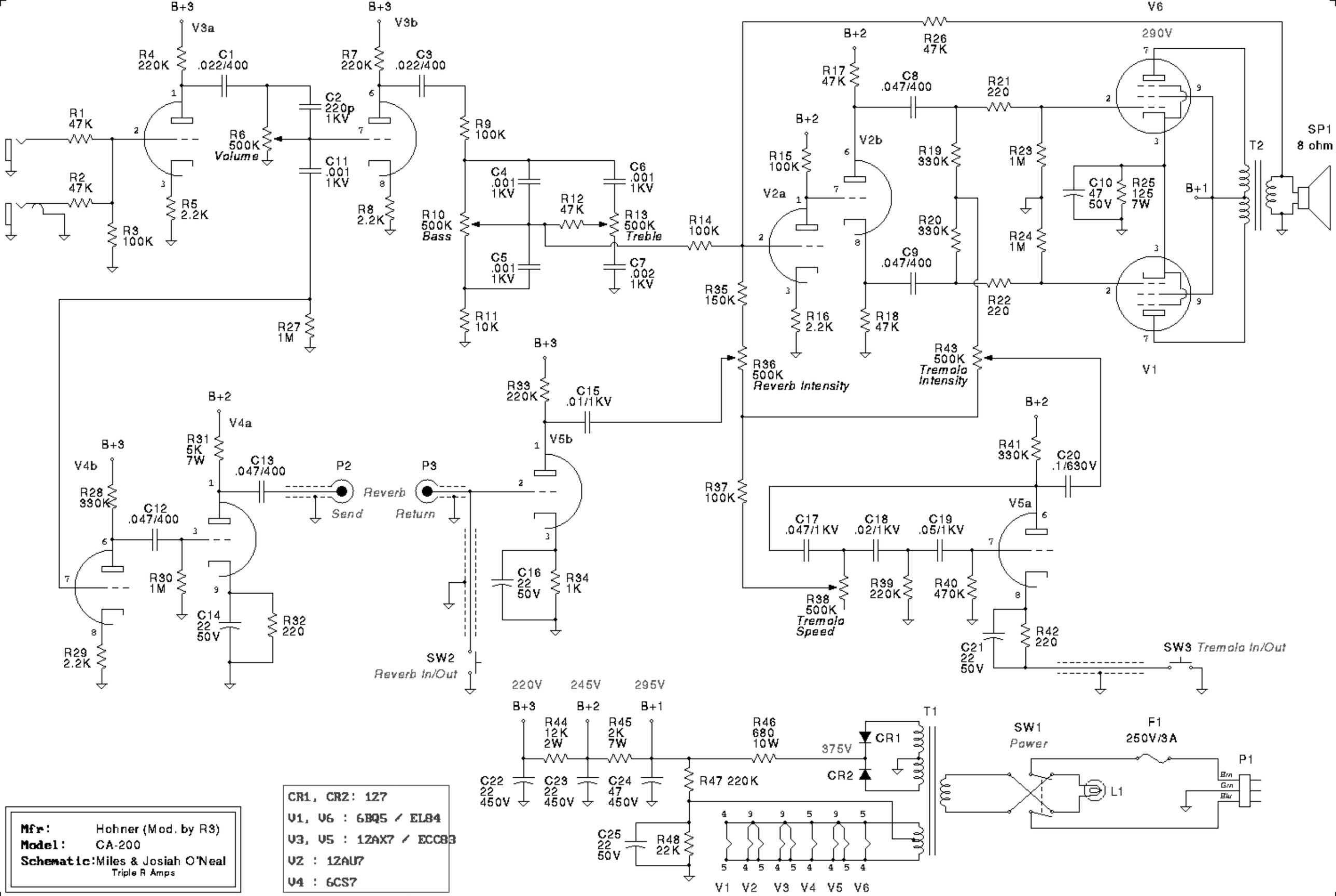

Mfr:	Hohner (Mod. by R3)
Model:	CA-200
Schematic:	Miles & Josiah O'Neal Triple R Amps

CR1, CR2: 1Z7
V1, V6 : 6BQ5 / EL84
V3, V5 : 12AX7 / ECC83
V2 : 12AU7
V4 : 6CS7