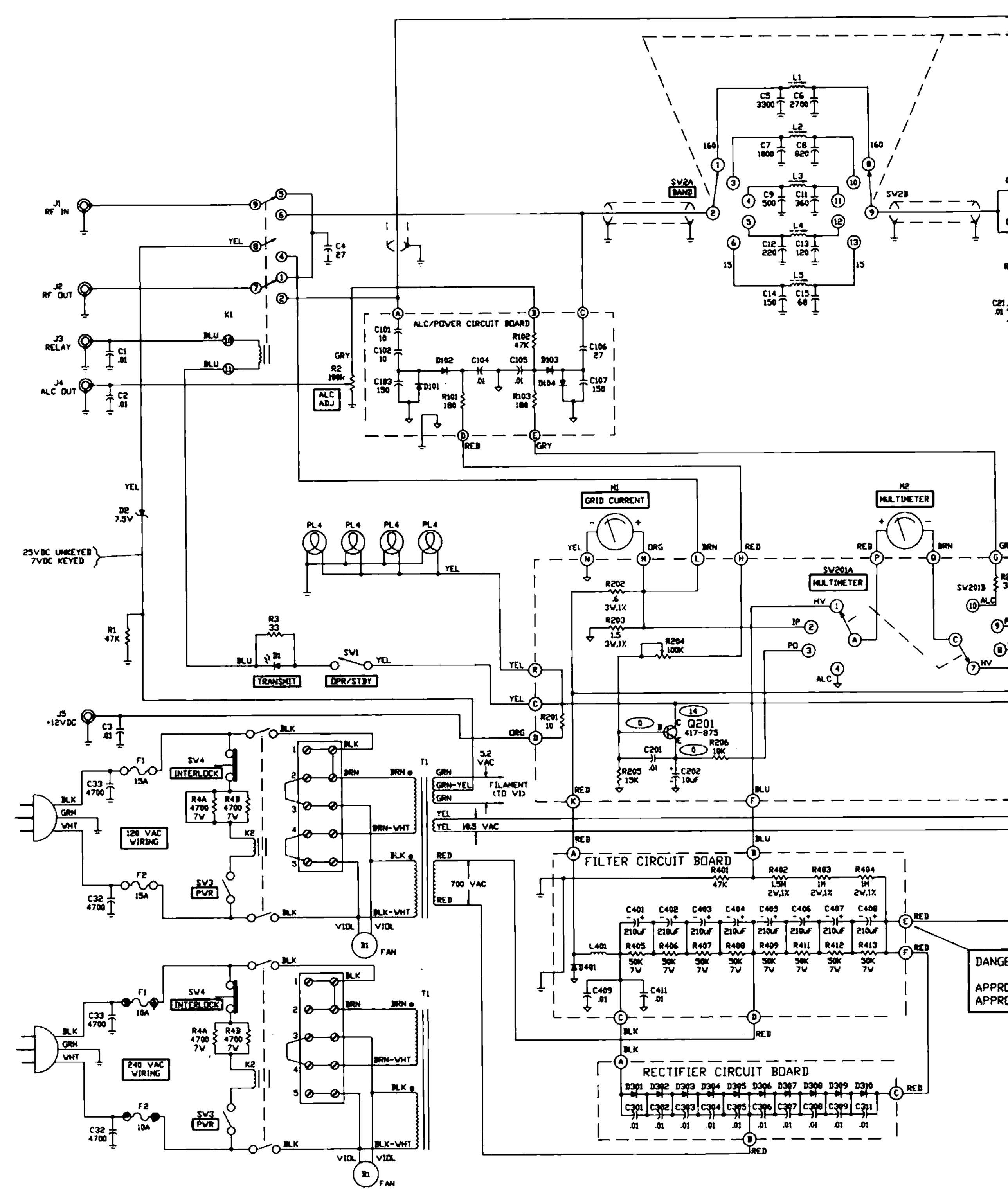
J1 RF IN
J2 RF OUT
J3 RELAY
J4 ALC OUT
J5 +12VDC
K1
K2
C1 .01
C2 .01
C3 .01
C4 27
R1 47K
R2 100K
R3 33
D1
D2 7.5V
25VDC UNKEYED
7VDC KEYED
ALC ADJ
TRANSMIT
OPR/STBY
SV1
PL4
ALC/POWER CIRCUIT BOARD
C101 10
C102 10
C103 150
D101
D102
C104 .01
C105 .01
D103
D104
R101 100
R102 47K
R103 100
C106 27
C107 150
L1
L2
L3
L4
L5
C5 3300
C6 2700
C7 1800
C8 820
C9 500
C11 360
C12 220
C13 120
C14 150
C15 68
SV2A
BAND
SV2B
M1
GRID CURRENT
M2
MULTIMETER
SV201A
MULTIMETER
SV201B
R202 .6 3W,1%
R203 1.5 3W,1%
R204 100K
R201 10
Q201 417-875
C201 .01
C202 10µF
R205 15K
R206 10K
F1 15A
F2 15A
SV4
INTERLOCK
SV3
PWR
C33 4700
C32 4700
R4A 4700 7W
R4B 4700 7W
120 VAC WIRING
240 VAC WIRING
T1
5.2 VAC
FILAMENT (TO V1)
10.5 VAC
700 VAC
B1 FAN
FILTER CIRCUIT BOARD
R401 47K
R402 1.5M 2W,1%
R403 1M 2W,1%
R404 1M 2W,1%
C401 210µF
C402 210µF
C403 210µF
C404 210µF
C405 210µF
C406 210µF
C407 210µF
C408 210µF
R405 50K 7W
R406 50K 7W
R407 50K 7W
R408 50K 7W
R409 50K 7W
R411 50K 7W
R412 50K 7W
R413 50K 7W
L401
D401
C409 .01
C411 .01
RECTIFIER CIRCUIT BOARD
D301 D302 D303 D304 D305 D306 D307 D308 D309 D310
C301 C302 C303 C304 C305 C306 C307 C308 C309 C311
.01
DANGE
APPRO
APPRO

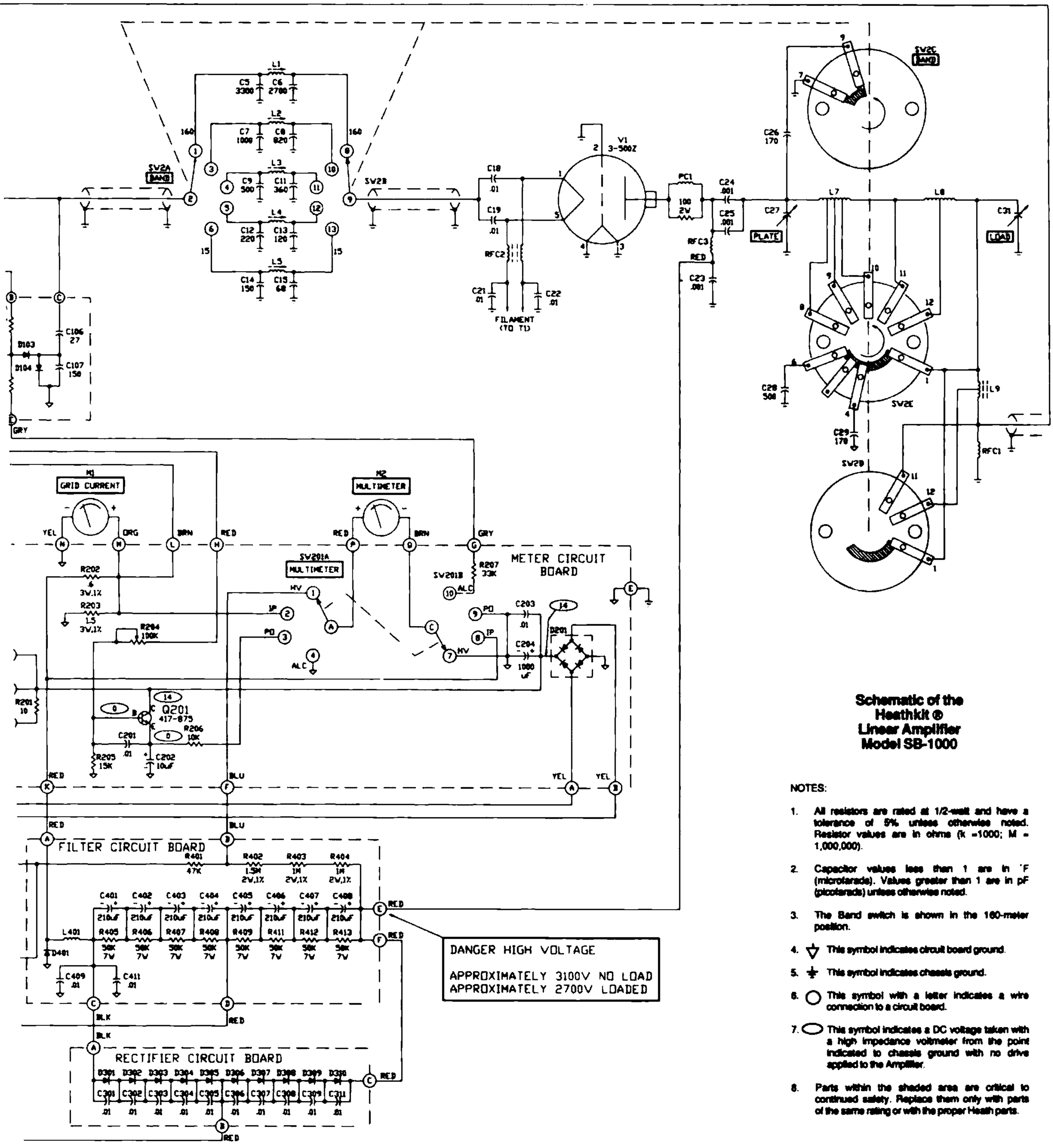

Schematic of the Heathkit ® Linear Amplifier Model SB-1000

NOTES:

1. All resistors are rated at 1/2-watt and have a tolerance of 5% unless otherwise noted. Resistor values are in ohms (k =1000; M = 1,000,000).
2. Capacitor values less than 1 are in 'F (microfarads). Values greater than 1 are in pF (picofarads) unless otherwise noted.
3. The Band switch is shown in the 160-meter position.
4. ▽ This symbol indicates circuit board ground.
5. ⏚ This symbol indicates chassis ground.
6. ○ This symbol with a letter indicates a wire connection to a circuit board.
7. ⬭ This symbol indicates a DC voltage taken with a high impedance voltmeter from the point indicated to chassis ground with no drive applied to the Amplifier.
8. Parts within the shaded area are critical to continued safety. Replace them only with parts of the same rating or with the proper Heath parts.