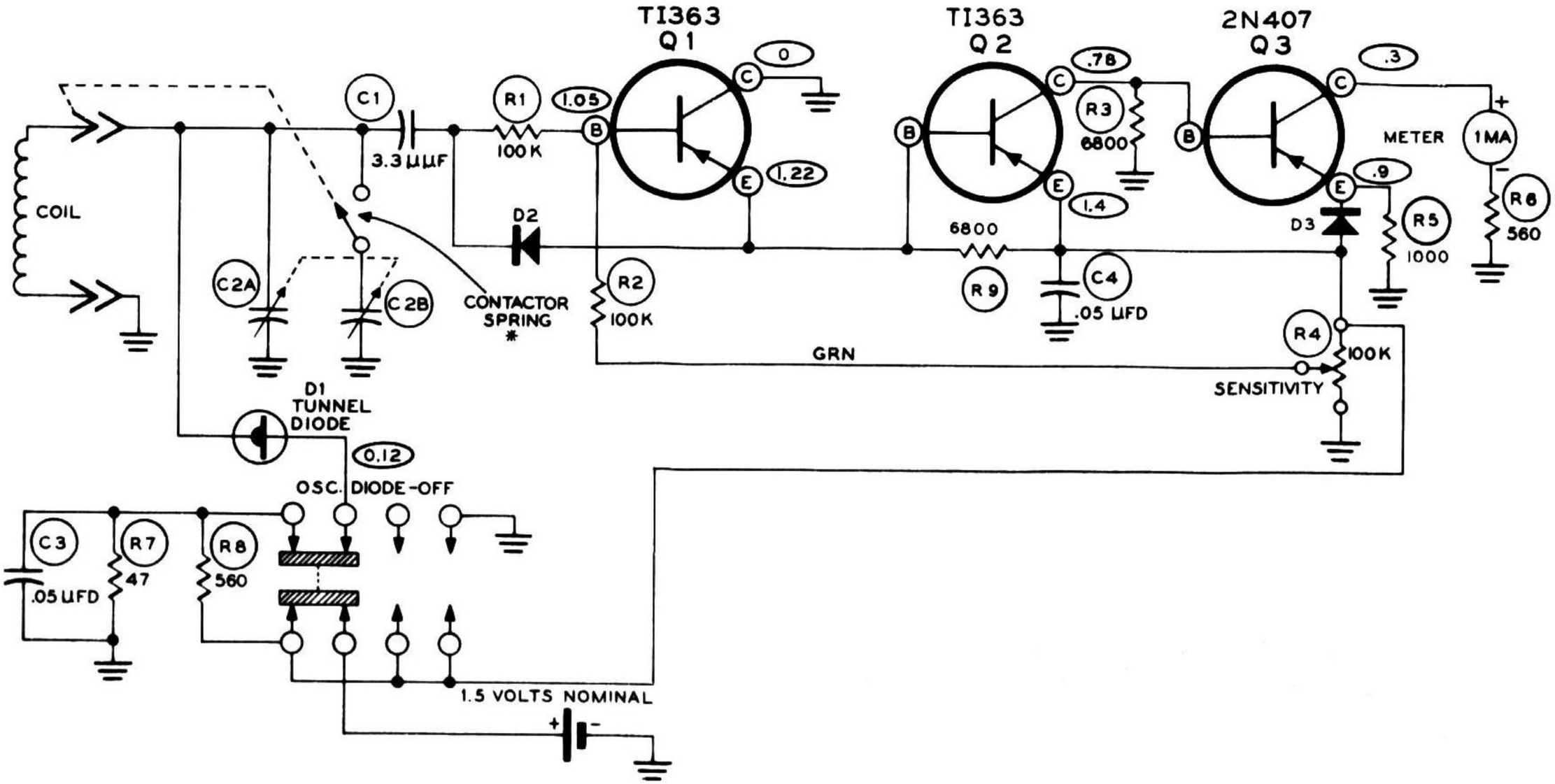

*C2B SWITCHED INTO THE CIRCUIT BY THE LONGER COIL PLUG PINS.

1. ALL RESISTOR VALUES ARE IN Ω; K = 1000.
2. ALL RESISTORS ARE 1/2 WATT.
3. ◯ INDICATES POSITIVE DC VOLTAGE MEASUREMENT FROM POINT INDICATED TO CHASSIS GROUND.
4. VOLTAGE MEASURED WITH AN 11 MEGOHM VTVM, SWITCH IN OSC POSITION AND SENS CONTROL SET TO READ 50 ON METER.

SCHEMATIC OF THE HEATHKIT® TUNNEL DIPPER MODEL HM-10 A