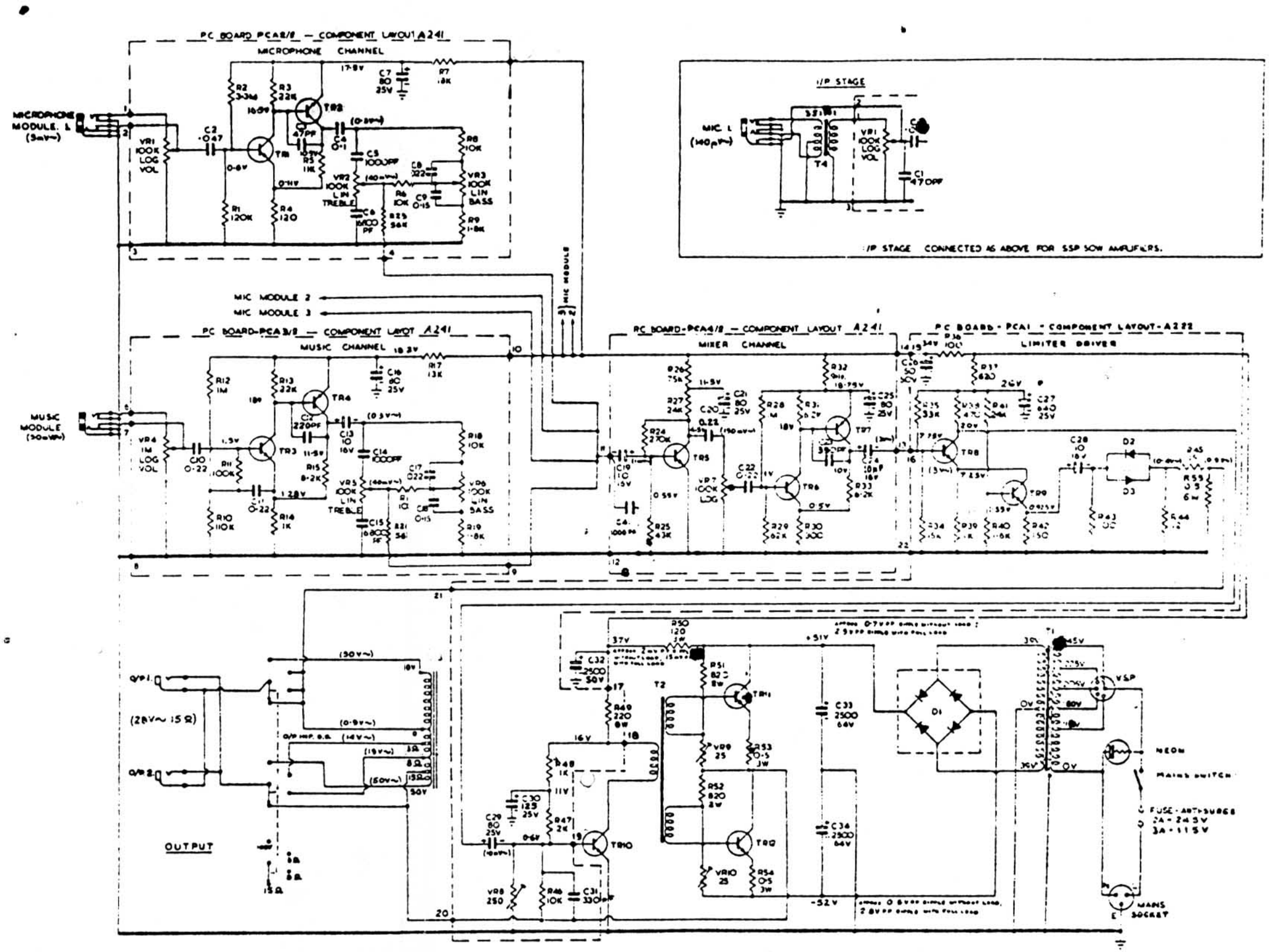

DIODE NOS	TYPES
D1	STC70CSDJ025800 or 58820
D2 - D3	HS1010 or OA200

TRANSISTOR NOS	TYPES
TR1 — TR3 — TR5 - TR6 - TR8 - TR9 (ALL N-P-N)	BC109
	BC114
	BC150
	BC171
	BC184L
TR10 (N-P-N)	2N3054
TR11 - TR12 (N-P-N)	2N3442 or 2N4347
TR2 - TR4 - TR7 (P-N-P)	BC153
	2N4058
	MPS6518, MPS6523
	BC214L

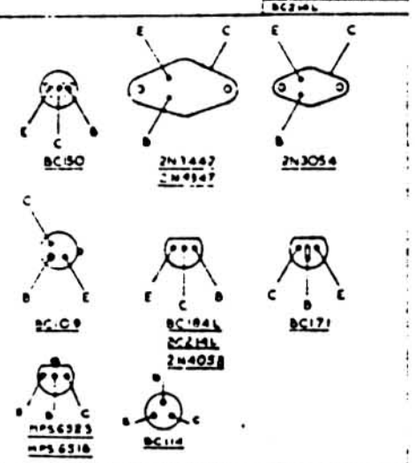

DRN	ENGR	THIS DRAWING MECHANICAL DOCUMENT BELONGS TO VOX SOUND LTD AND IS ISSUED ON CONDITION THAT IT IS NOT LOANED REPRINTED OR DISCLOSED TO A THIRD PARTY EITHER WHOLLY OR IN PART WITHOUT THE CONSENT IN WRITING OF VOX SOUND LTD
APPROVED	MAT.	SCALE
		TOL.

TITLE :- 50W SSG & SSP PA AMPLIFIER

DRG No 05/177

VOX SOUND LTD. ERITH KENT ENGLAND

N.B. VOLTAGE VALUES SHOWN WITHOUT BRACKETS @ 17.5V REFER TO D.C. VOLTAGES WITHOUT SIGNAL WHICH WERE MEASURED IN RESPECT TO EARTH ON AN AVO8 METER.
VOLTAGE VALUES IN BRACKETS E.G. (1mV~) REFER TO SIGNALS AT 1kHz GIVING 50W OUTPUT INTO 15Ω
EVENTUAL VARIATIONS IN VOLTAGE READINGS ARE DUE TO DIFFERENT GAIN SPREADS OF TRANSISTORS
ALL RESISTORS ARE 1/4 WATT, UNLESS STATED OTHERWISE