Controllable Tremolo Circuit

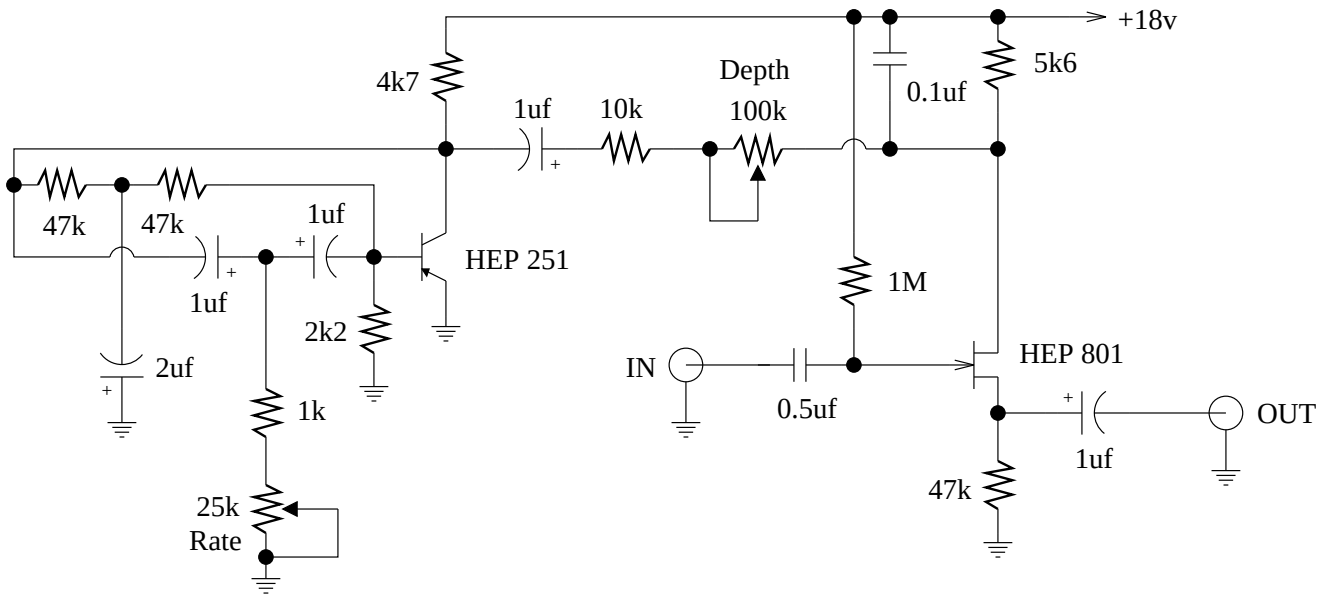

This tremolo circuit is not a "plug and play" ready guitar effect, however it could be converted to one with relative ease. It just needs some buffering on the input and ouput and perhaps some bypass switching.