Tone Booster

from Everyday Electronics Sept. 1978

peaks frequencies at 5000 Hz for a "cleaner and more penetrating" sound

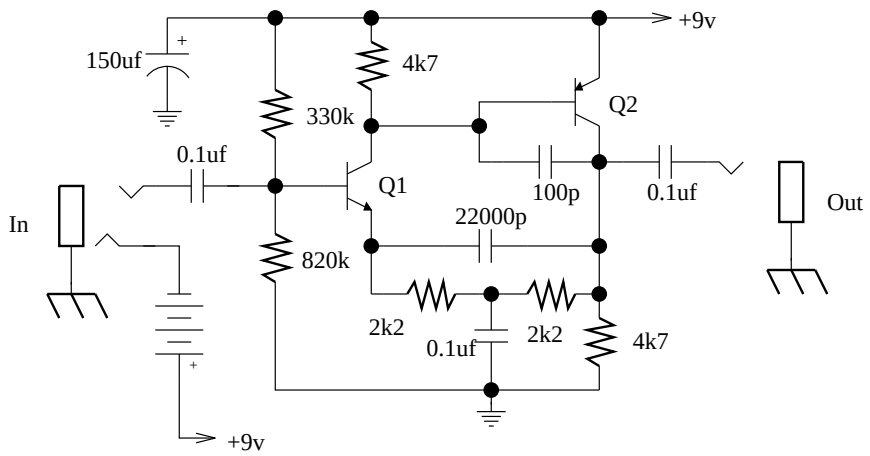

Q1 - ztx384

Q2 - BC415p