Name: Soul Preacher	Manufacturer / Designer: Electro-Harmonix	Revision: 10/13/95	Model #

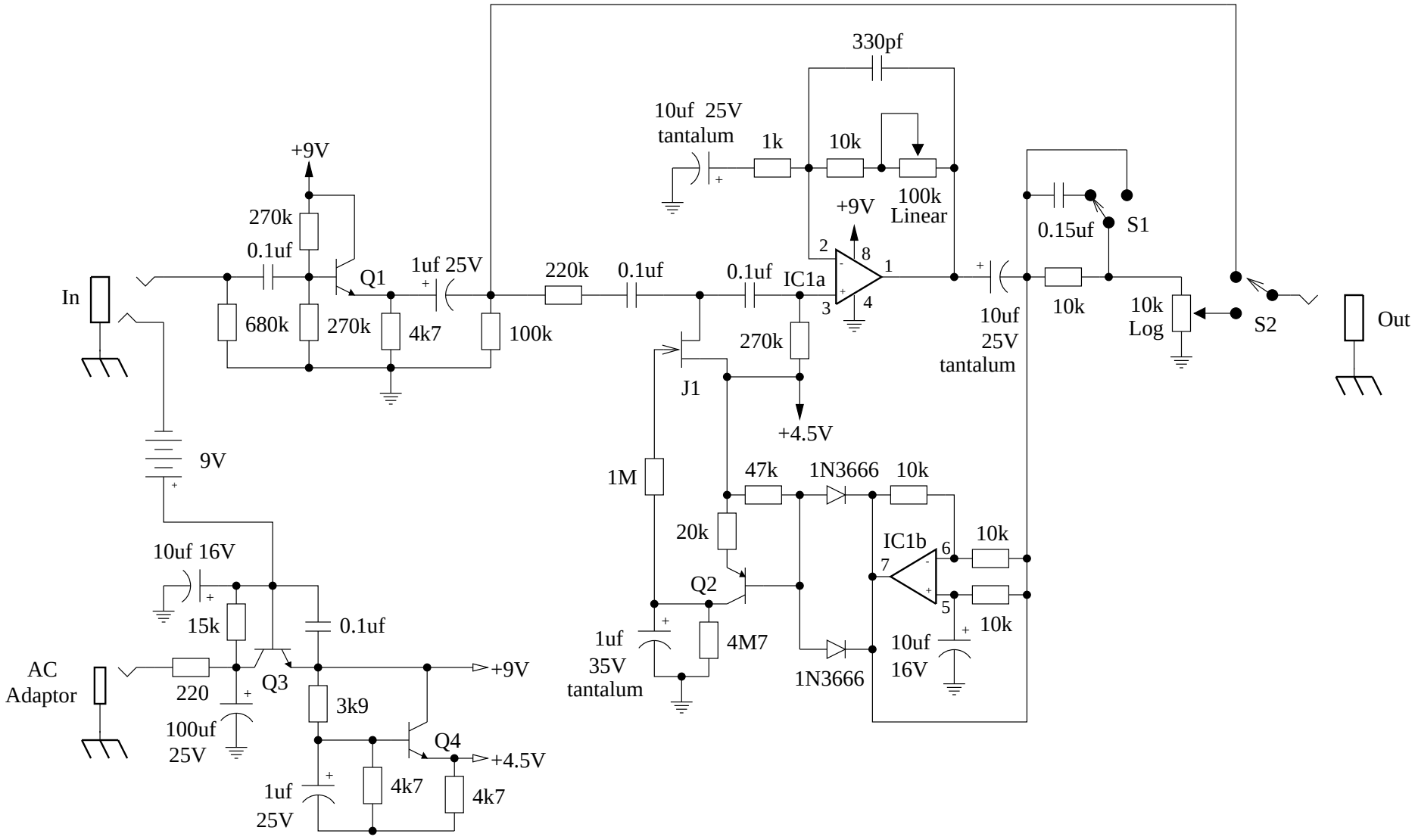

-All resistors are carbon film, 1/4W, 5%, unless otherwise noted
-All non-polarized capacitors are mylar, 50V, 10%, unless otherwise noted
-Transistors Q1-4 and FET J1 are unknown
-IC1 is a 4558