Simple Mixer

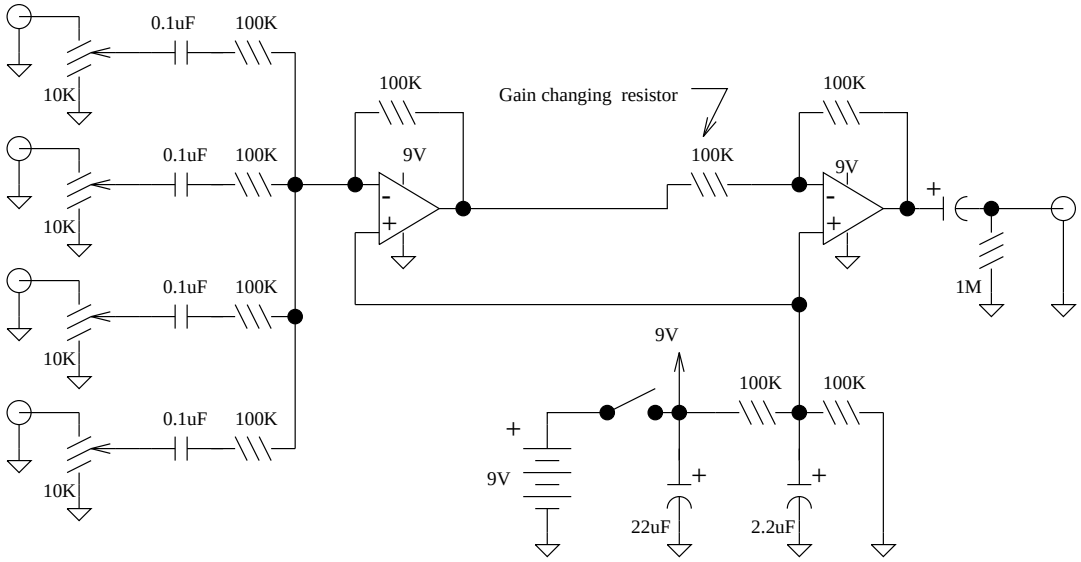

A simple mixer suitable for mixing microphones or effects outputs. The overall gain from input to output is one if the pot corresponding to the input is full up. You can make this a net gain of ten (or any other reasonable gain) by reducing the input resistor to the second op amp. 10K in this position gives a gain of ten, or 20db. If you are mixing effects outputs which have an output level control built into them, you can dispense with the input level controls, or make some have level controls, some not. Audio taper pots are probably better, but linear will work.

For the opamps, choose a jfet input dual or singles, like from the National Semi LF3xx series, or something like the TL072 or TL082.