Stage Center Reverb Unit

from Guitar Player 1976 by Craig Anderton

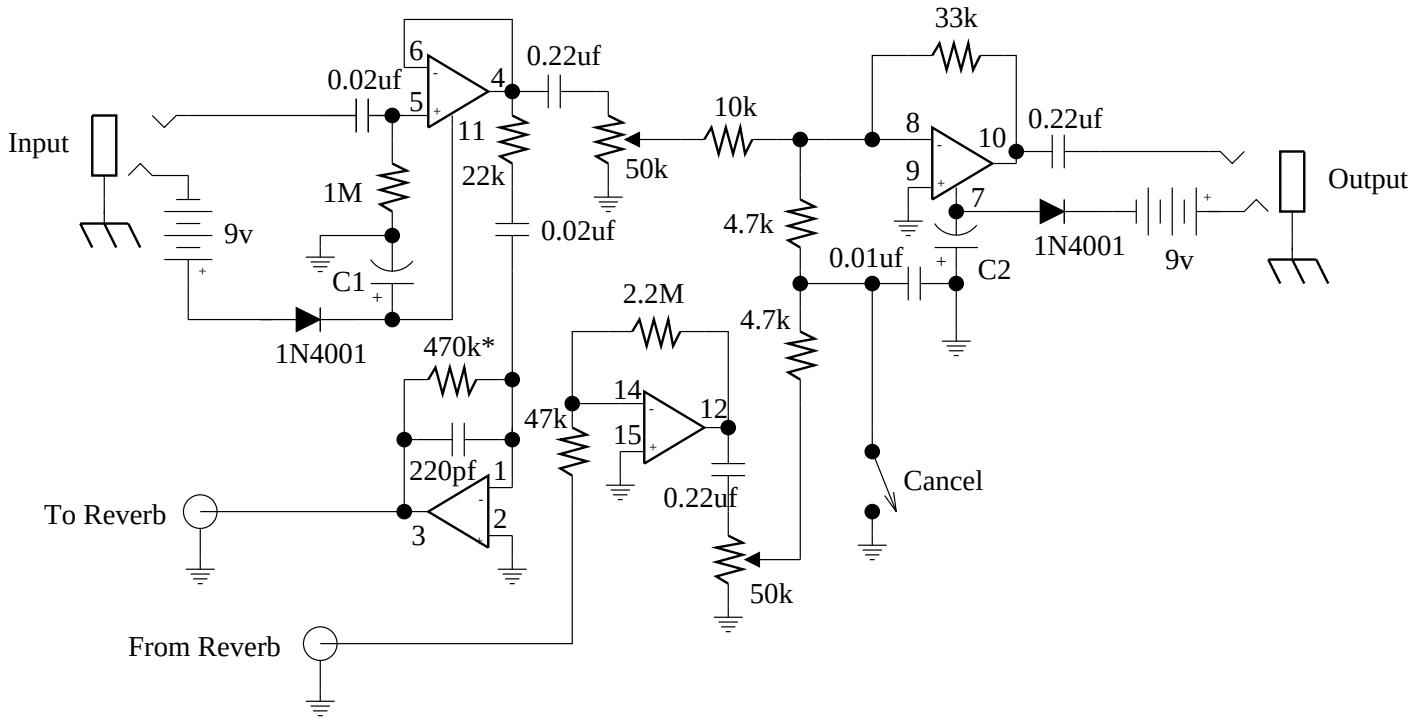

This simple spring reverb can be built cheaply and requires a minimal amount of space for the circuit it self. The op-amp is a quad type, the pinout for a 4136 is shown, but others may be substituted. The bypass caps C1 and C2 can be from 10 to 100 uf. The resistor marked with a * may need to be lessened if you experience distortion in your reverb, lower this to achive maximum signal with no distortion. Many spring reverb units may be used with this circuit, the original article suggested an accutronics model. Many reverb units also use RCA style jacks for in's and out's, be prepared for this. The cancel switch will shut off the reverb effect without any clicks or pops. All resistors are 1/4 or 1/2 watt, 5% tolerence, and all caps are rated at 10 or more volts.