On Board Guitar Preamps

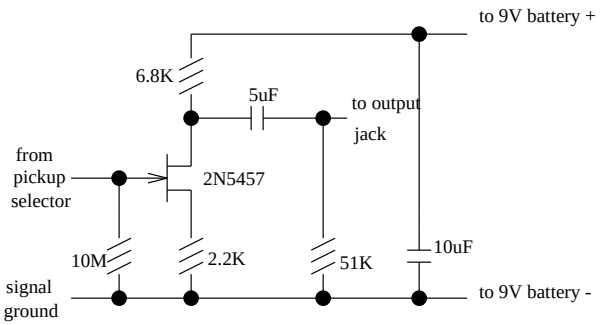

For people who don't like op amps, here is a discrete JFET preamp design. It has low distortion, low noise, low feedback, overloads gracefully, is small, etc, etc. Overall gain is 3db (2X) or so. It uses about 1/2 ma, so a 9V battery will last a long time. You can add a high boost switch if you like by having it shunt the 2.2k resistor with a 0.05uF cap (or other value; smaller cap = boosts only higher frequencies, and the reverse). You can just put in a 10uF cap across the 2.2k resistor to up the gain.

Circuit by Don Tillman. don@till.com

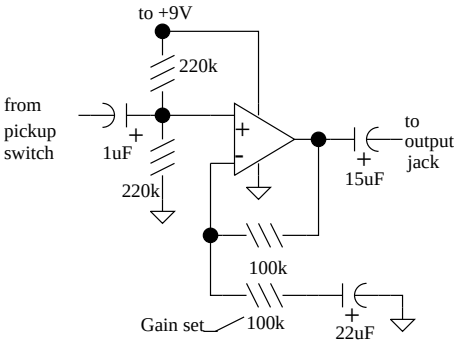

A preamp from a TL071 op amp. The gain set resistor lets you customize the gain. As shown, it is 2. Lowering the Gain Set resistor lets you raise the gain. You get distortion at high gains.

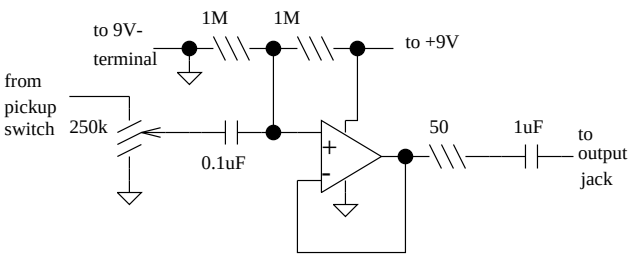

The opamp is a LT1012 micro power opamp, could be other low noise low power op amp. Use a stereo jack on the guitar to turn power on when a cable is plugged in. The circuit produces no noticeable noise or distortion and a 9 volt battery lasts a couple of years. This is intended to buffer the guitar pickups and controls from the cable capacitance. It is possible to add gain to this circuit by modifying the feedback loop on the op amp.

Circuit by Mike McTigue.