ProCo Rat Distortion

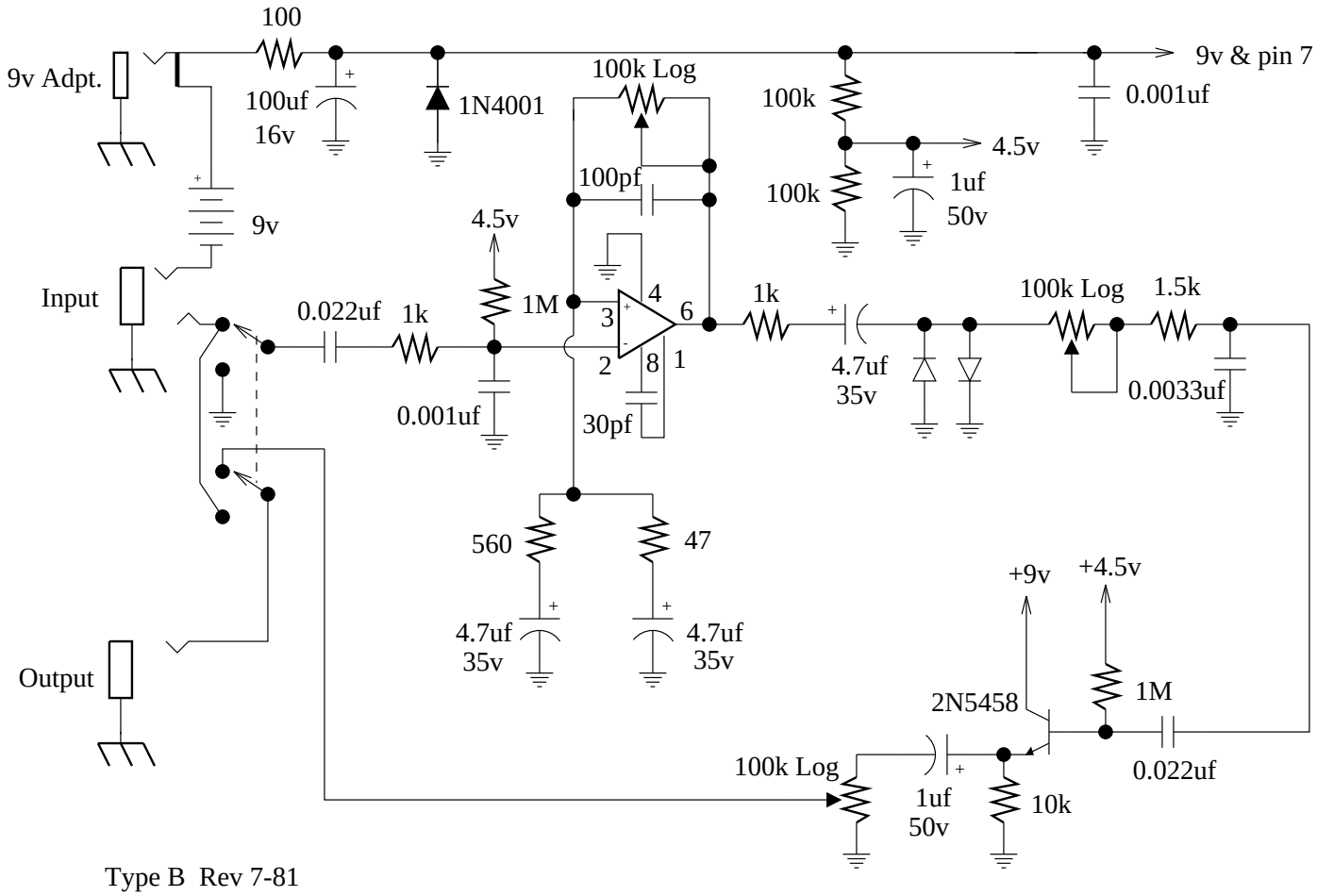

Type B Rev 7-81

IC = LM308

Diodes = 1N4148

Current Drain @ 9v

~ .6ma, no Input (idle)

~ 1.6ma, full output