ProCo Rat Distortion

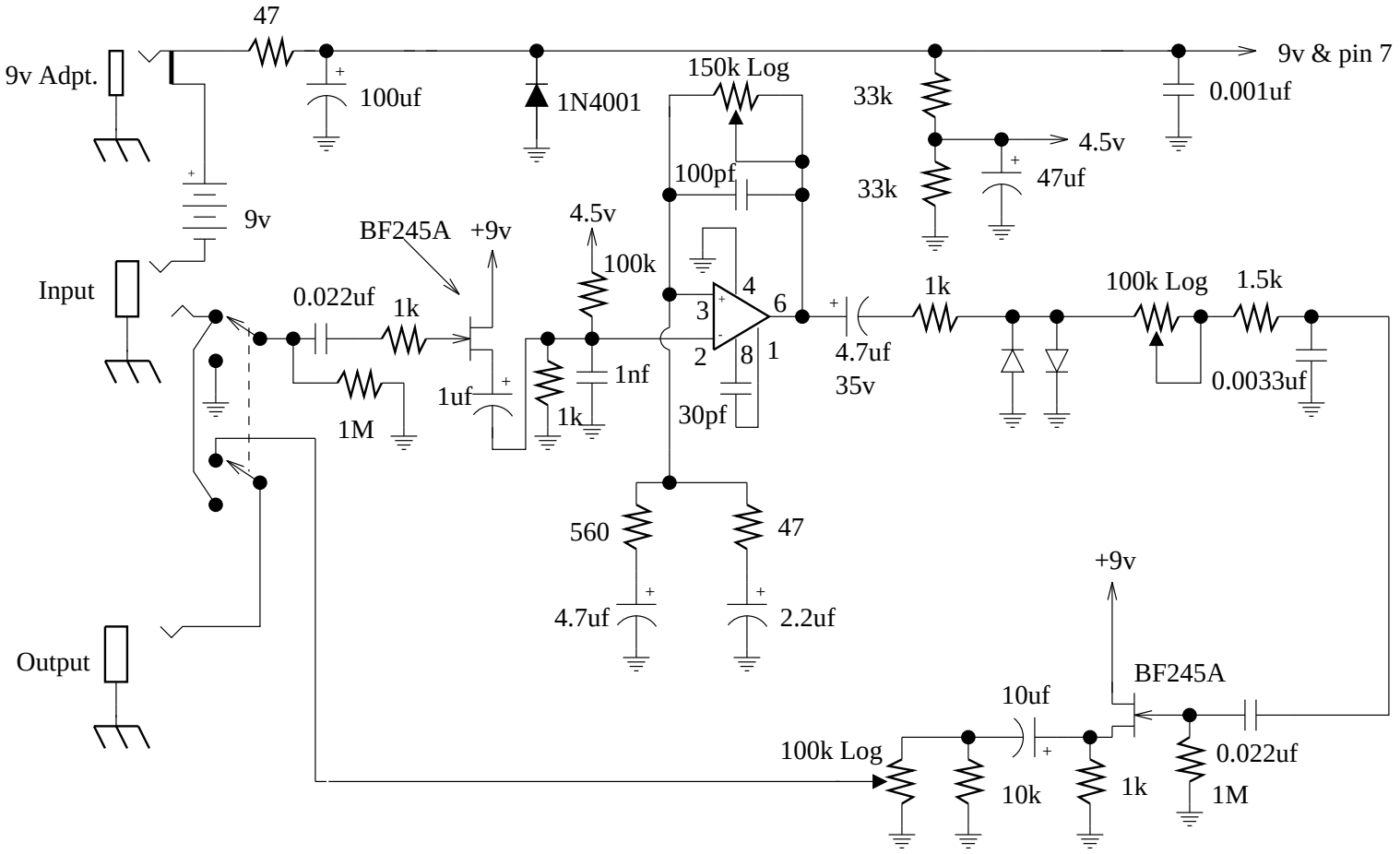

IC = LM308

Diodes = 1N4148