Olson New Sound

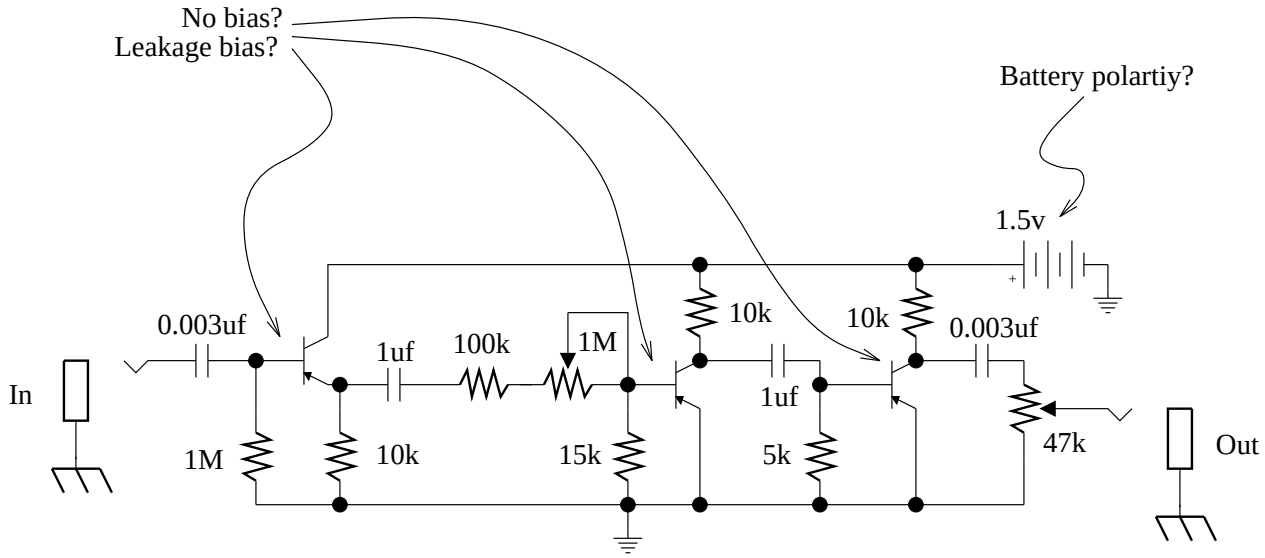

= 2SB175

Runs on one 1.5v battery!