MXR Hot Tubes Distortion

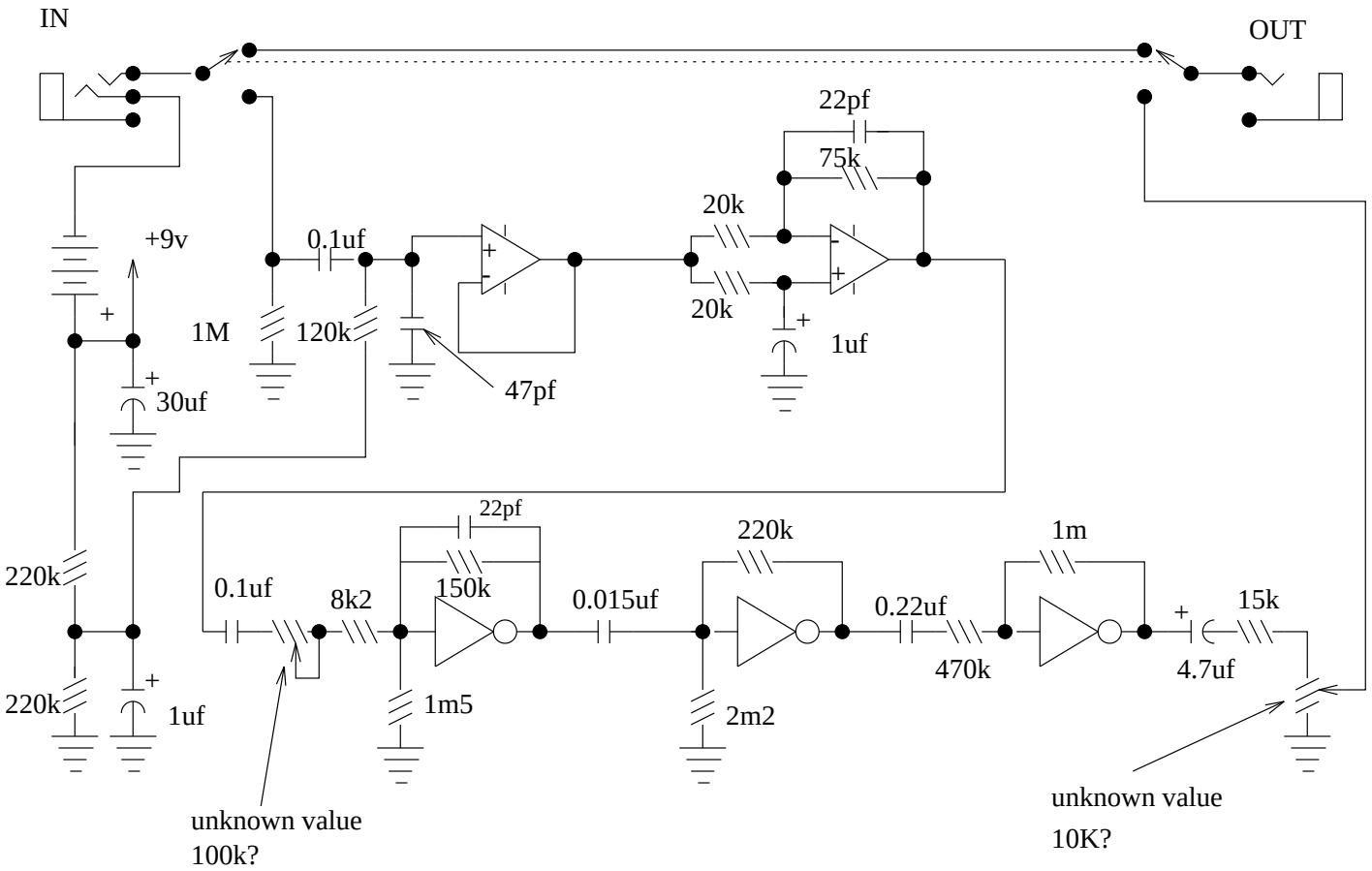

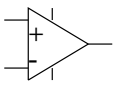

= 1/2 of dual 741 or 4558 opamp; +v on pin 8, -v on pin 4

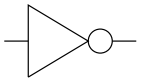

= 1/6 of CD 4049 CMOS inverter. Vdd on pin 1, Vss on pin 8

The MXR Hot Tubes is a commercial cousin of Craig Anderton’s "Tube Sound Fuzz". It differs in that it uses a dual opamp input buffer, more stages, and more filtering. Also, there appears to be a DC offset in the bias points of two of the inverter/distortion stages.