Maestro Fuzz

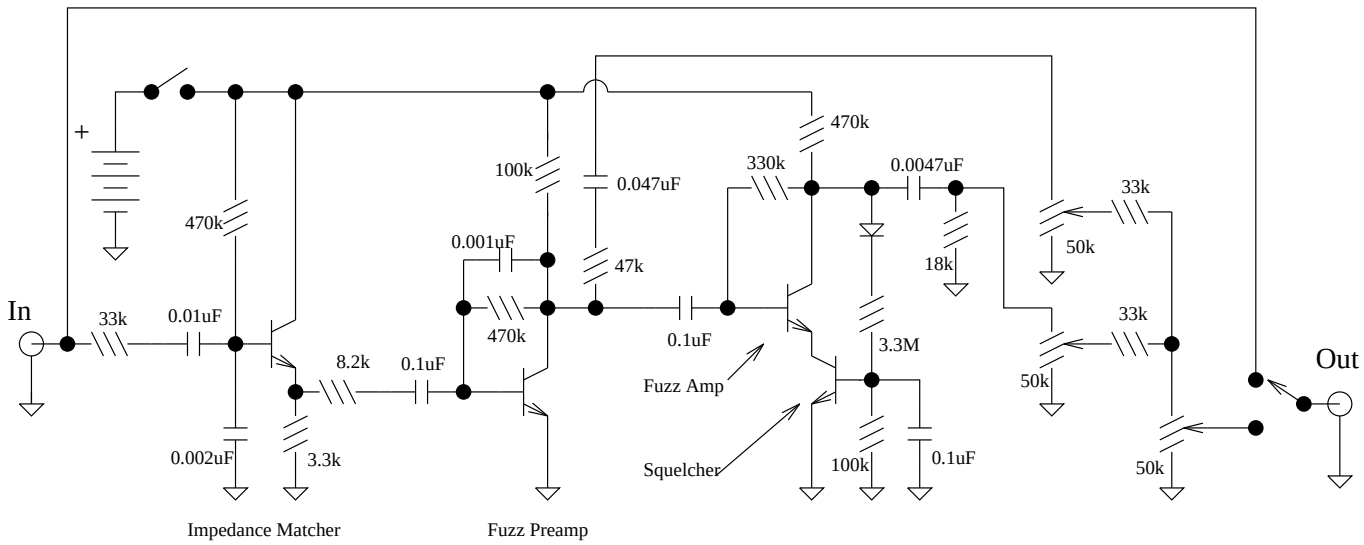

The Maestro Fuzz is reputed to be the fuzz used in the recording of the Stones' "Satisfaction". The transistors are house numbered "991-002298" and the diode is house numbered "919-004799". They are probably all germanium devices. The use of a squelch device is somewhat unique, possibly put there to tame hiss and noise during quiet passages between notes. The two 50K pots which have their wipers connected by resistors are wired so that as one increases, the other decreases, giving a pan from one point in the circuit to another, probably changing the amount of distortion. The last 50K pot is an output level control.

This unit could probably benefit from a modern DPDT switch setup to completely isolate the circuit when it is switched out, and a modern input-jack power switching arrangement.