Electro-Harmonix Little Big Muff

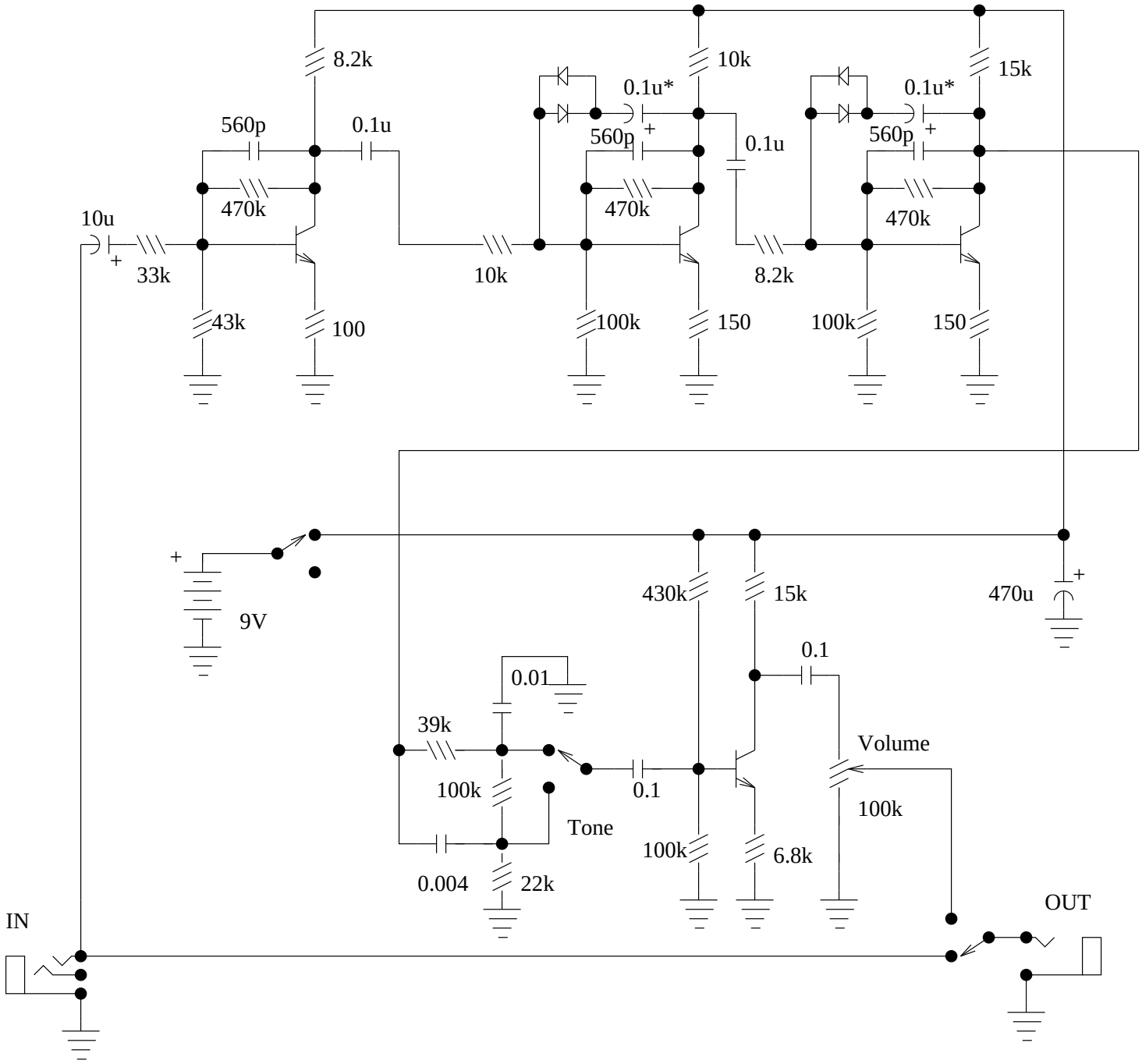

The EH Little Big Muff could probably be improved with modern input jack power switching and a DPDT bypass.

This is the original schematic. The diode and transistor types are unknown. Probably any high gain NPN and 1N914s work.

The caps marked with a * have been reported to work great at 1.0uf.