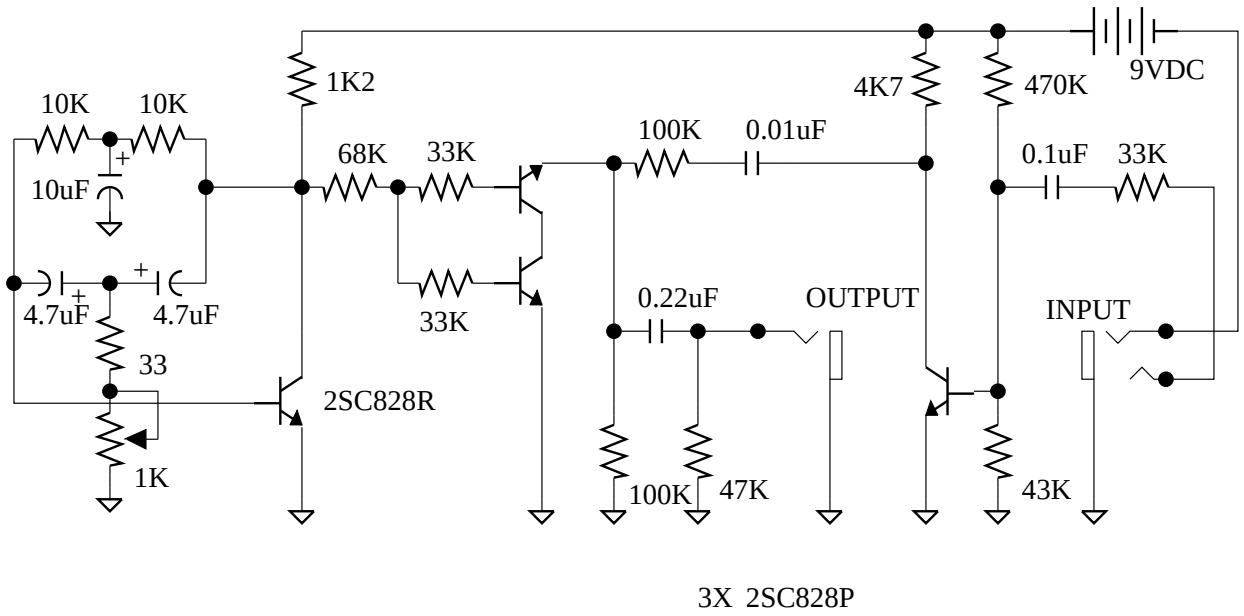

Kay Tremolo Model T-1

The Kay model T-1 tremolo is a very simple circuit. A twin-T oscillator circuit drives two bipolar transistors to load the signal down after it is amplified by a single input stage. The sound of this is more like the "repeat percussion" effect of Thomas Organ Vox amplifiers than the smooth variation in loudness of tube based amplifier tremolos, but it is a useful sounding effect; just different. The pedal itself is a cheesy plastic case with a wah-pedal like treadle which controls the speed of the oscillator. There is no tremolo depth control, and the in/out switch is not shown on the schematic from the inside of the case, although it is a very conventional DPDT bypass. The bypass was unique in that you had to slide a switch manually, no stomp switch on this one.