Jordan Boss-Tone

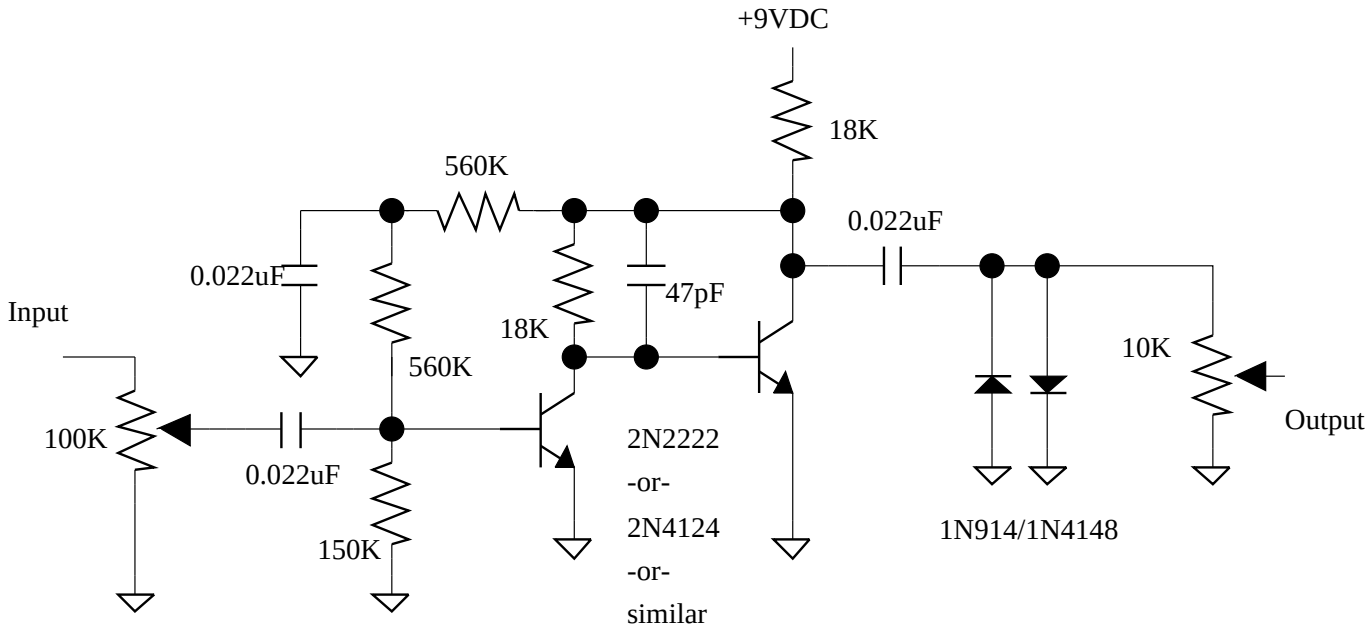

The Jordan Boss-Tone is another distorter from the Inna-Gotta-Have-A-Fuzza era of effects. This circuit fragment shows only the effects circuit, not the in/out switching and the battery circuit. A DPDT stomp switch and input-jack battery switching would finish this up nicely. Like many others, the circuit is based on a collector voltage feedback single transistor circuit with a second transistor as a buffer following the first gain stage. Others in this genre are the Vox Tone Bender and the venerable Fuzz Face, although these do not have a diode-clipping limiter after the gain stages.