Jimi Hendrix Fuzz Face

by Jim Dunlop

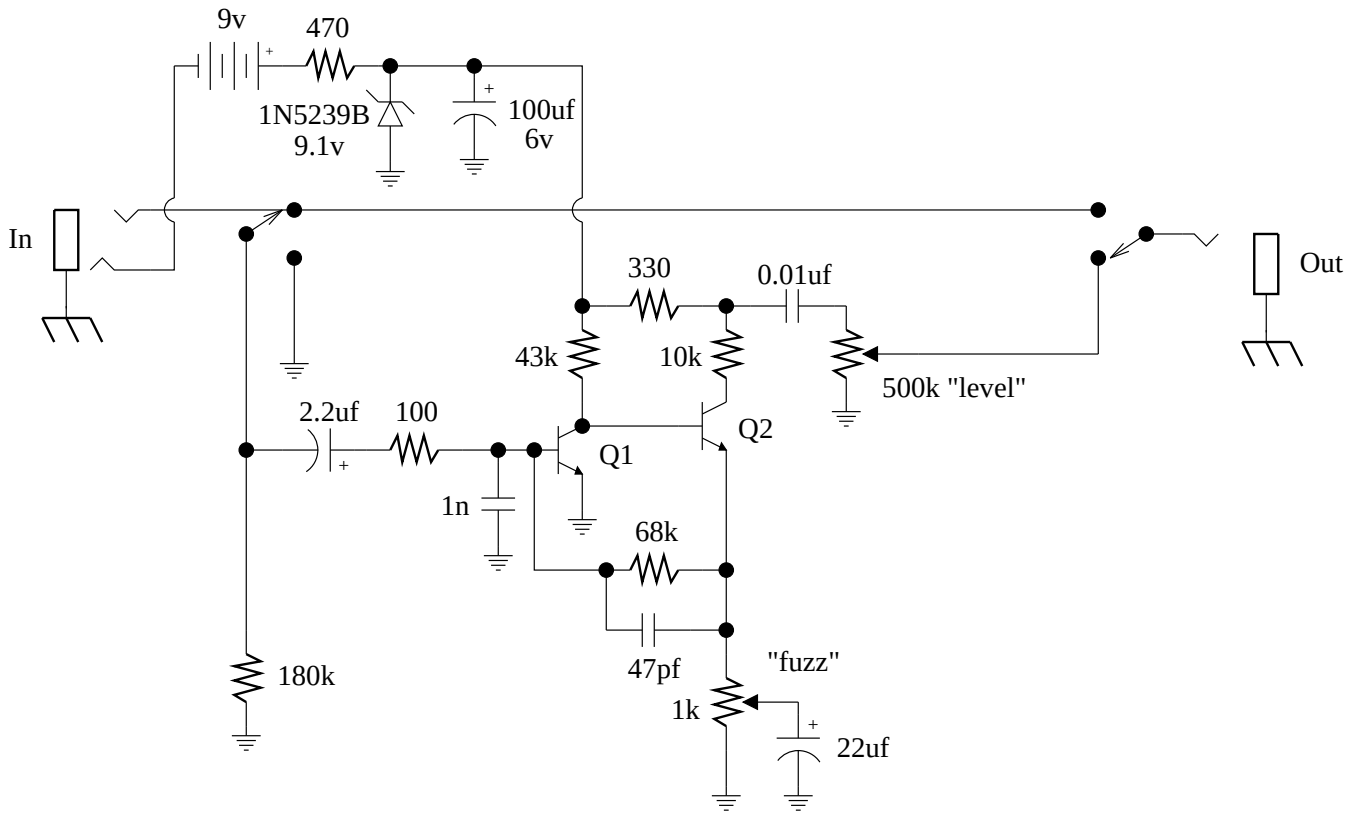

Q1 & Q2 are MPSA18

Model JH-2