TS-9 Tube Screamer

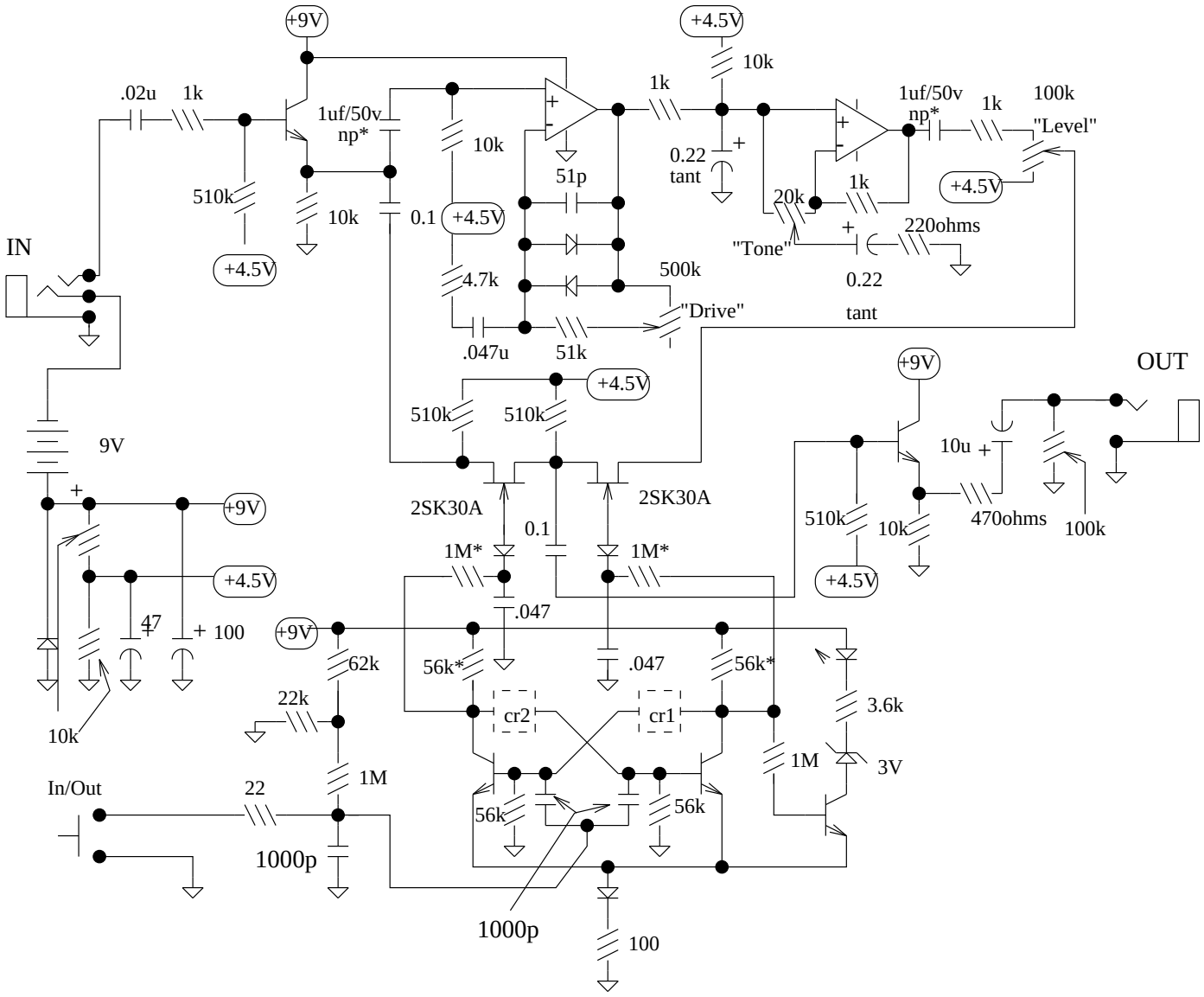

Opamps are in a dual 8 pin dip, 4558. All transistors 2SC1815. All diodes silicon signal diodes, 1n914 or similar. np* = nonpolorized resistors denoted by * marked as 1M on original might be 22k and those marked as 56K might be 10k. crf1 and cr2 are a special cap and resistor in parallel, the cap is 51p the resistor is 56k.