Harmonic Sweetener

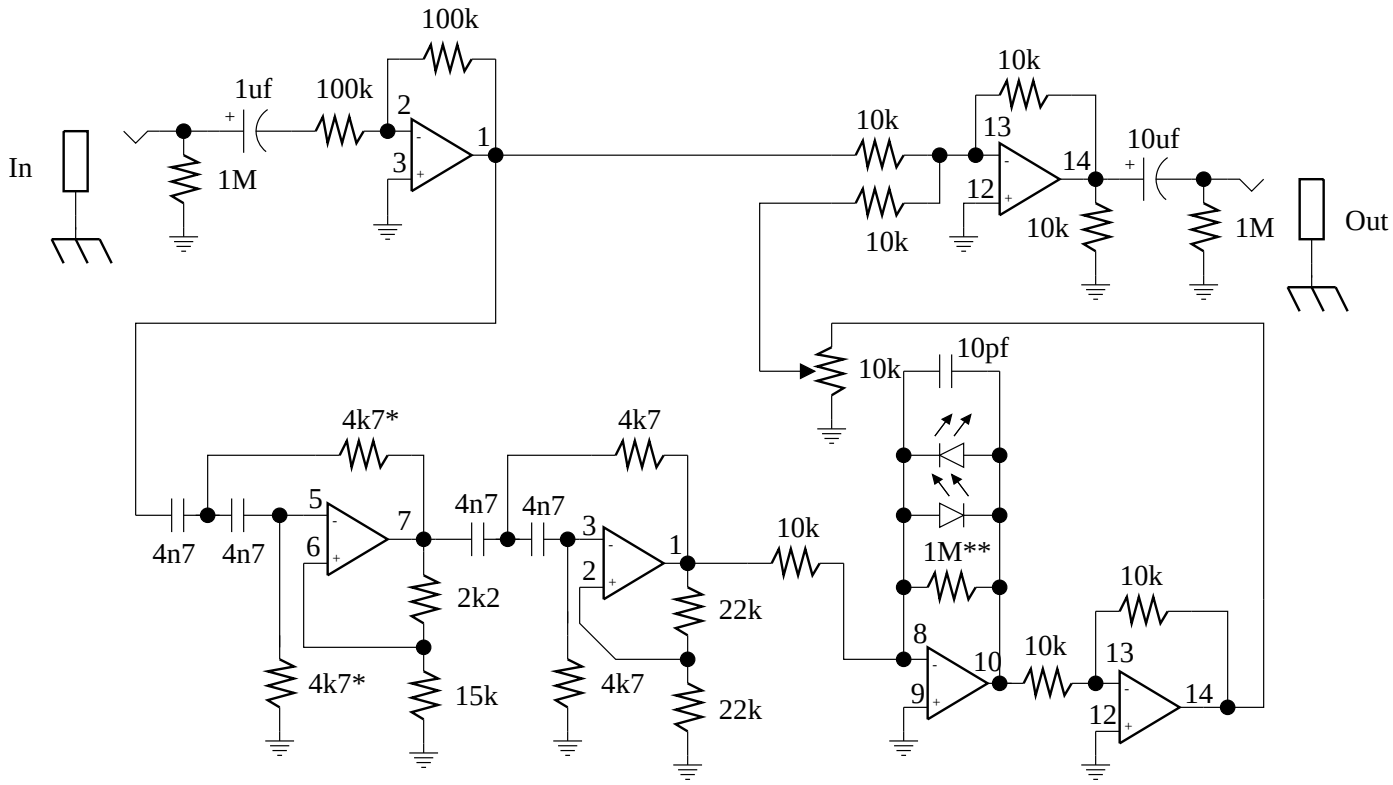

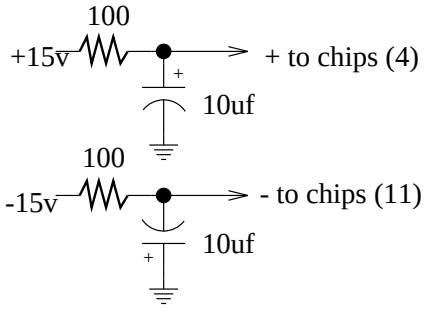

A couple of red led's will work nicely for the clipping section. The op-amps shown are TL074 types with 3 of the 4 amps used. Possible modifications include changing the resistors marked * to a 10k dual-ganged pot for a tunable filter, and/or changing the resistor marked ** to a 2.5 M pot for a drive option.