Name: Green Ringer	Manufacturer / Designer: Dan Armstrong	Revision: 9/23/95	Model #

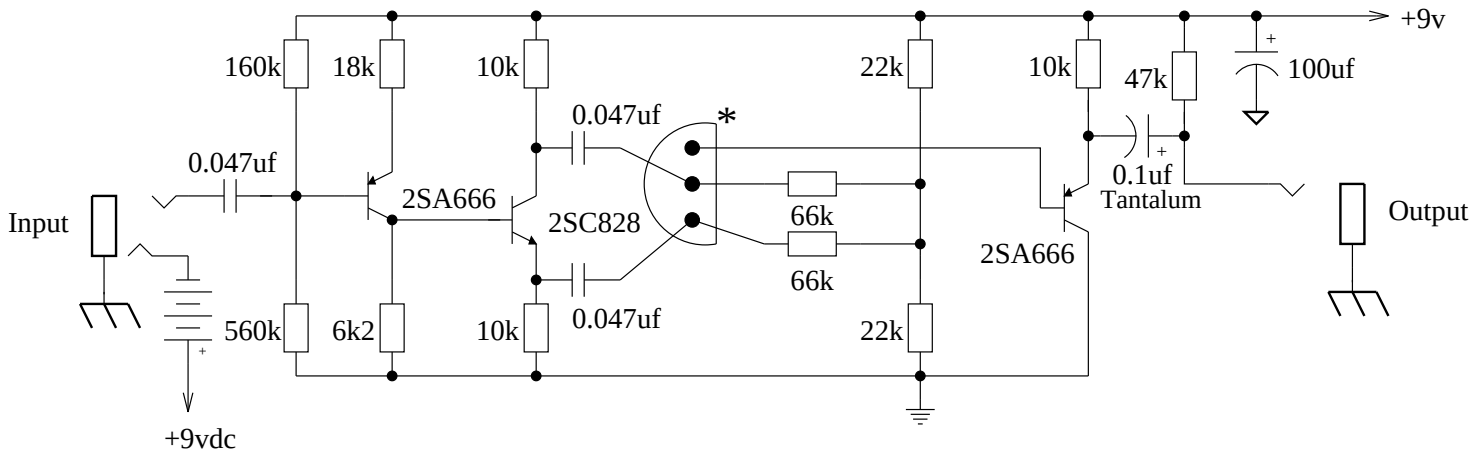

The transitor marked "*" has no markings other than three stripes; green, blue, white, from top to bottom. It is PROBABLY a low gain NPN used as a dual diode with the anodes connected together at the base of the final transistor. The continuity test on the device shows no conductivity except that the topmost pin conducts when it is positive of the pins in the middle and other side; otherwise, no conduction. This is what would be expected if it were an NPN with the same pinout (base, collector, emitter) as the other transistors.