Guitar Effects Unit
(Octaver-Fuzz)

extracted from ETI-Canada, January 1980

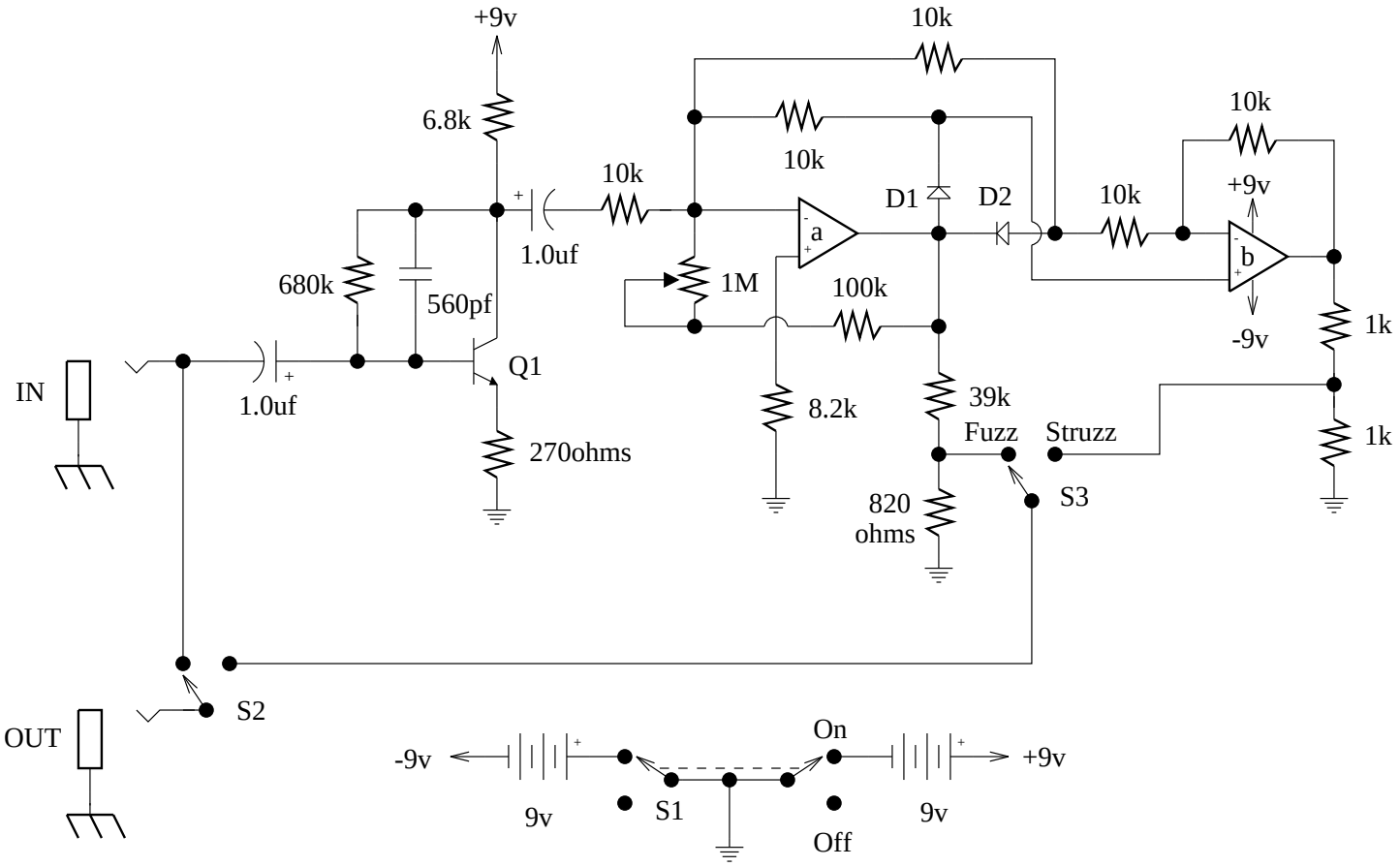

Q1 is MPS6515
DI and D2 are 1N4148
The IC is any lownoise dual op-amp, shown is the 4558.
Switching could be improved with a full bypass mod.

The GEU is good sounding octave fuzz, with an optional mode of just fuzz. The fuzz is a fully rectified signal and is quite chewy. For some the Fuzz alone might not be loud enough, this can be fixed by raising the value of the 820 ohm resistor and lowering the 39k one. Or one could just replace both with a normal volume pot for a more standard approach. The "struzz" is the fuzz with an octave higher signal mixed in. Good for singal notes and leads.