Fuzz Face

Dallas Arbiter

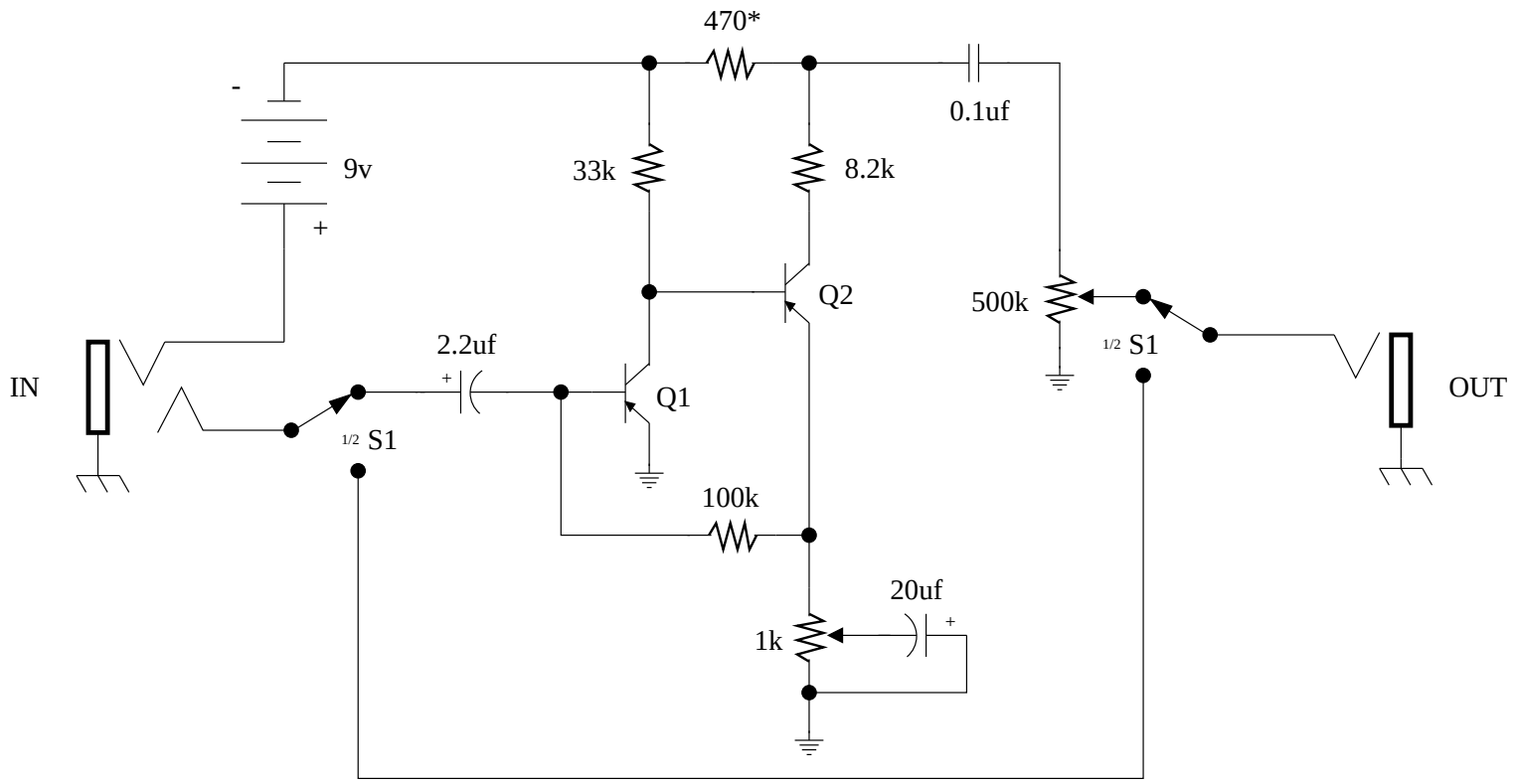

There are apparently two similar versions of the fuzz face. In one Q1 and Q2 were PNP germanium AC128 or NKT275 types in the other they were NPN sillicon BC108C types. Now depending on which type you choose to build will influence some of the other components. For a PNP version the schematic is as shown, but if you build the NPN version then the 470 ohm resistor marked by a * must be changed to 330 ohms and the battery and all the polarized capacitors must be reversed. The original schematic is not exaclty what is shown above, it had a very complex switching system which has been simplified (nothing has been lost don't worry) and a unique grounding setup. Aside from that the schem is exact with minor differences in components on various units (eg. some had the 0.1uf cap listed as .047uf, which shouldn't make a difference as long as you feed a high impedance amp). The transistors are hard to find, the thing to look for is germanium transistors with a decent gain factor (gain > 80). Note silicon transistors will clip harshly and may not sound good, though 2n3906 has been said to work.