Distortion Booster

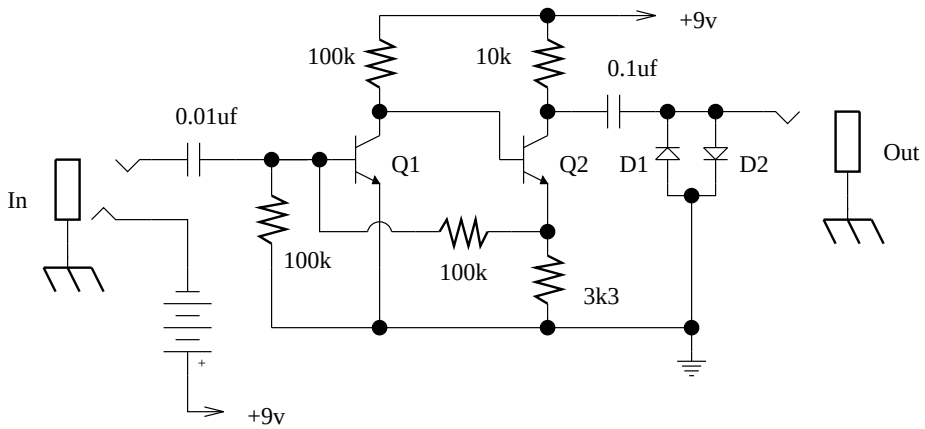

Q1 and Q2 are BC108

D1 and D2 are silicon or germanium (pick your favorite flavor) signal diodes.

-make unknown...