FOXX FUZZ-WAH

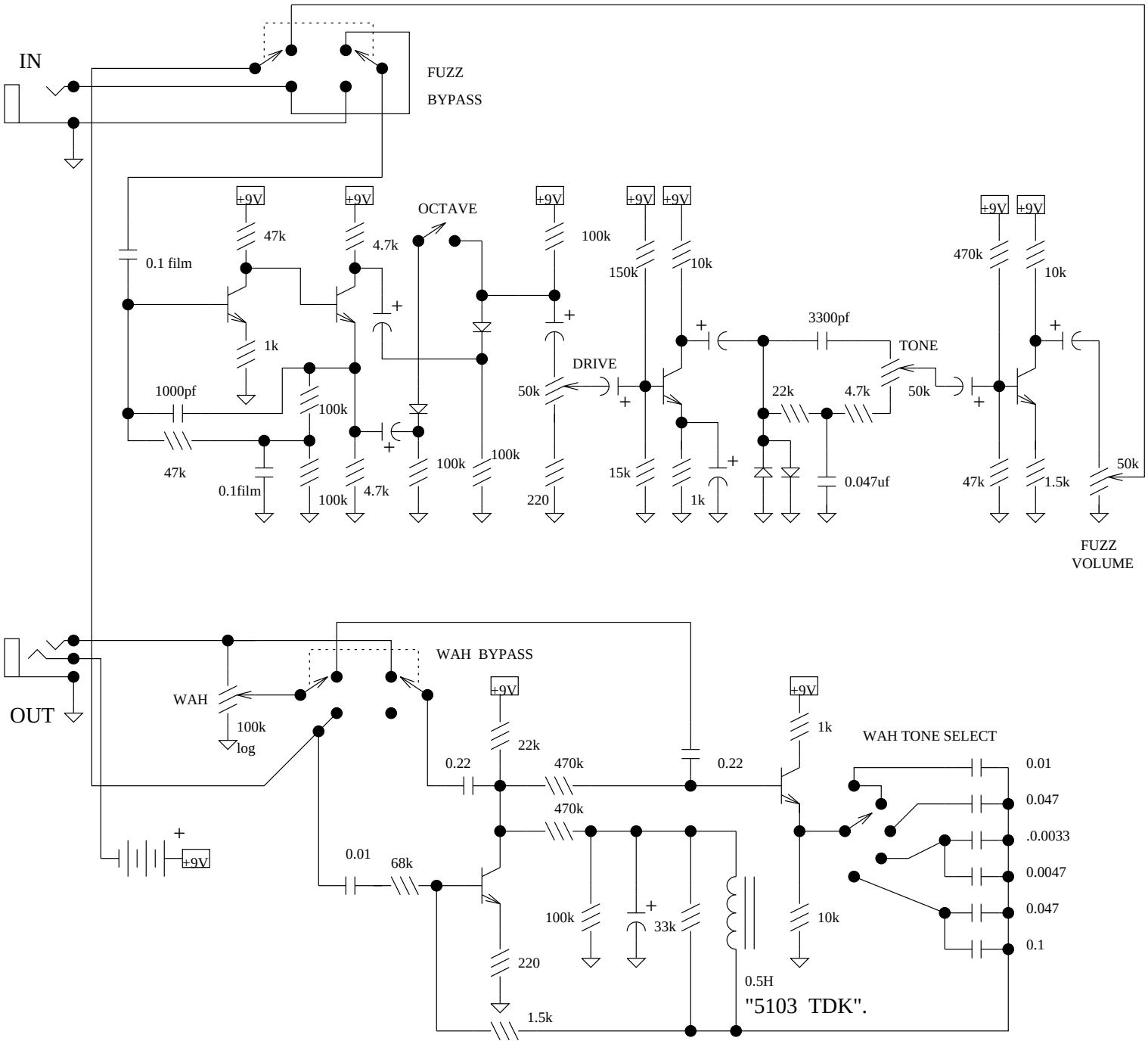

The Foxx Fuzz Wah includes a fuzz, an octave effect, a wah pedal, and in later versions a volume pedal al l in the same box. The box, by the way, is covered in blue or red no-fooling stiff plastic fuzz. The wah has four different resonant frequencies selected by a rotary switch. The inductor should be relatively easy to find, as it looks to be a somewhat standard part.
The volume pedal action is the default when wah is bypassed. Max volume is with the pedal all the way back, very odd.

- All transistors 2N3565-R249, NPN silicon in little plastic button packages.
- All diodes germanium
- All unmarked electrolytic capacitors 10 uF, 16Vdc.

The fuzz and octave section MAY be a copy of the Octavia pedal.
Note that the Wah pot is log (audio) taper. The wah sound is really sensitive to the positioning of the wah pot’s rotation in the rack-and-pinion.