ELECTRA DISTORTION

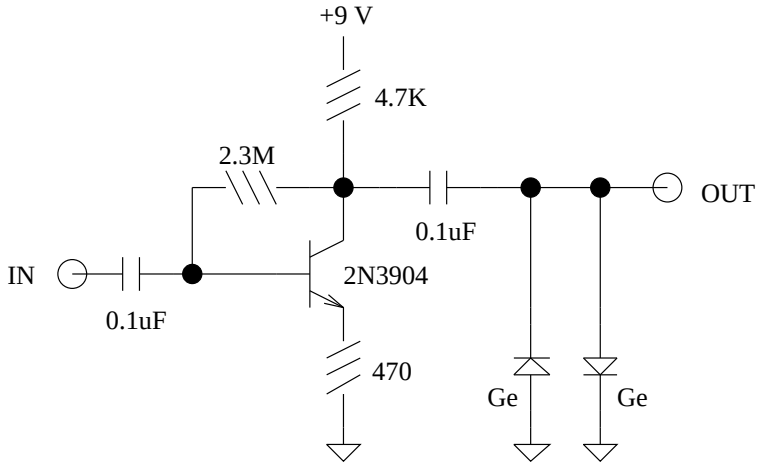

This distortion was posted to the net by Bruce E. (?), bew4568@zeus.tamu.edu on 5/14/94. It is supposed to sound amazingly like a Tube Screamer. With the exception of the diodes, the circuit is the same as the circuit for the Electra Power Overdrive module, which was fitted inside some Electra guitars in the 70's. It's important to use germanium diodes to get the right sound. Silicon is supposed to produce more power and less distortion. Ge gives 0.4 volts of signal out, Si gives 1.4 volts. The values of the collector and emitter resistors can be changed to give more or less gain and distortion. The unit is not just a hard diode clipper, as the diodes load the output of the transistor and modify its gain as they turn on, giving softer clipping than you would expect.