Electro Harmonix Fuzz-Wah
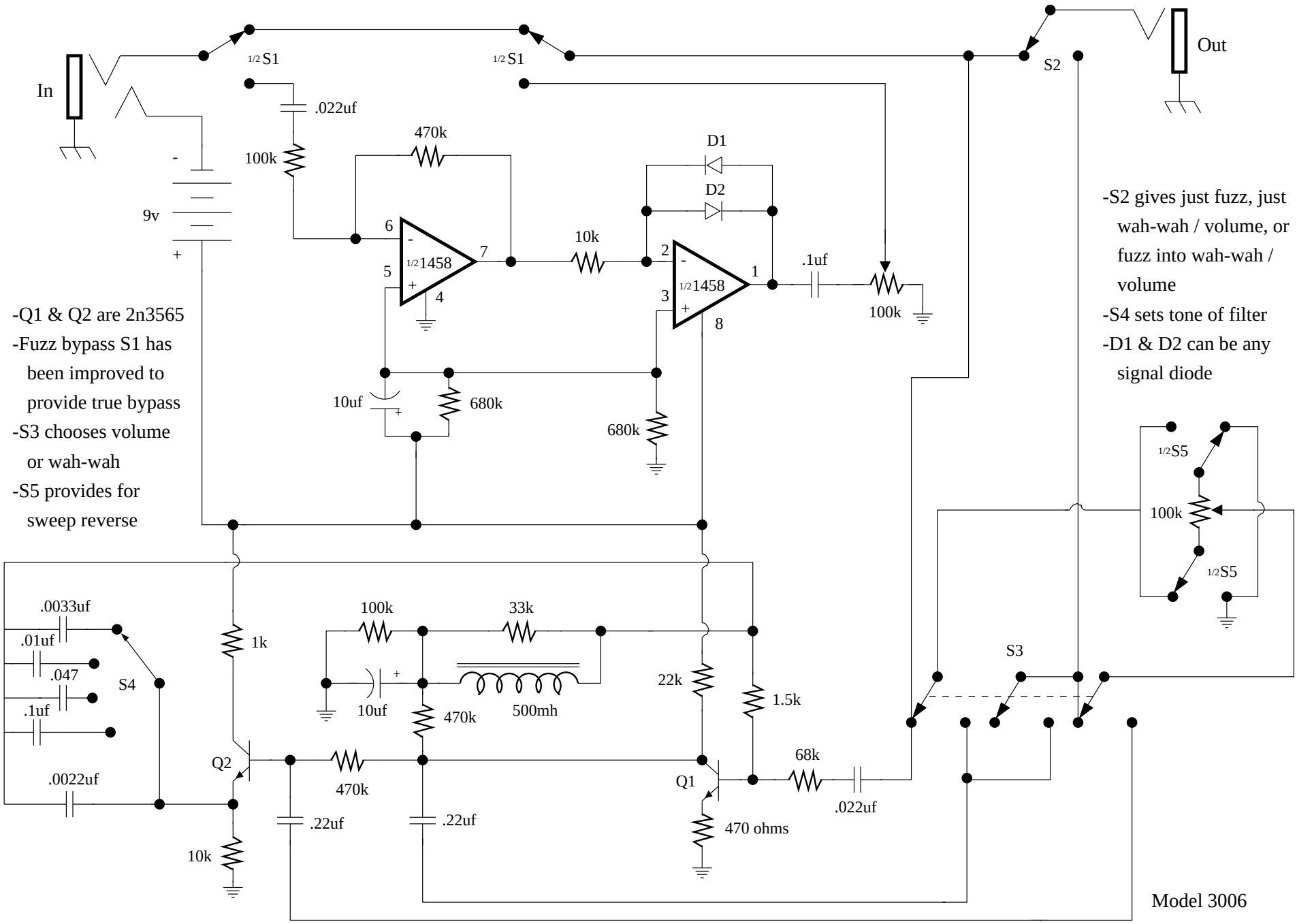
(Actually Fuzz-Wah/Volume)