ELECTRO HARMONIX BOOSTERS

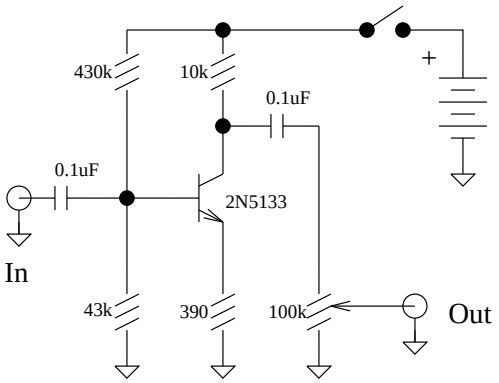

LPB-1, LPB-2, EGO

Other variations on the LPB-1 include a BC239 with a 100k resistor from base to ground and a 1M resistor between base and collector.

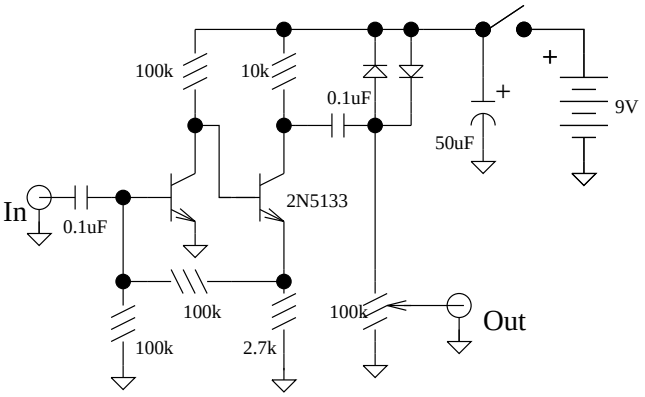

Muff Fuzz / Little Muff Pi (early)

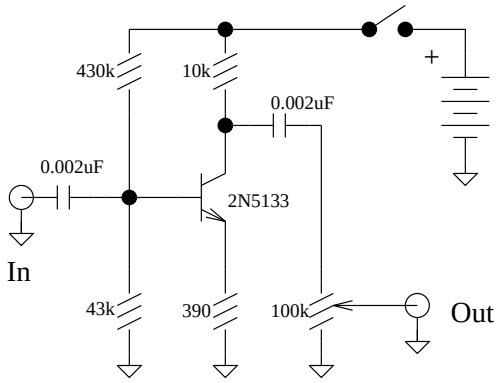

Screaming Bird/Tree

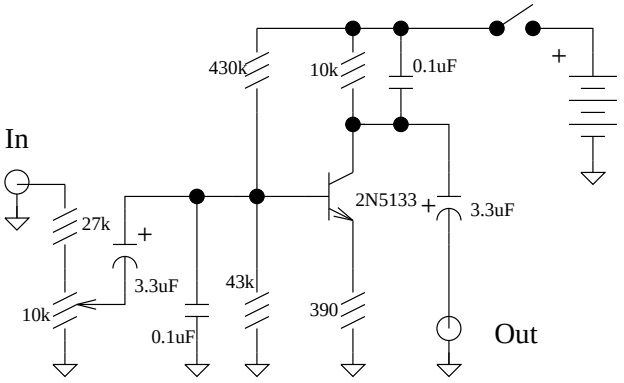

Mole/ Hog's Foot (Old Version)

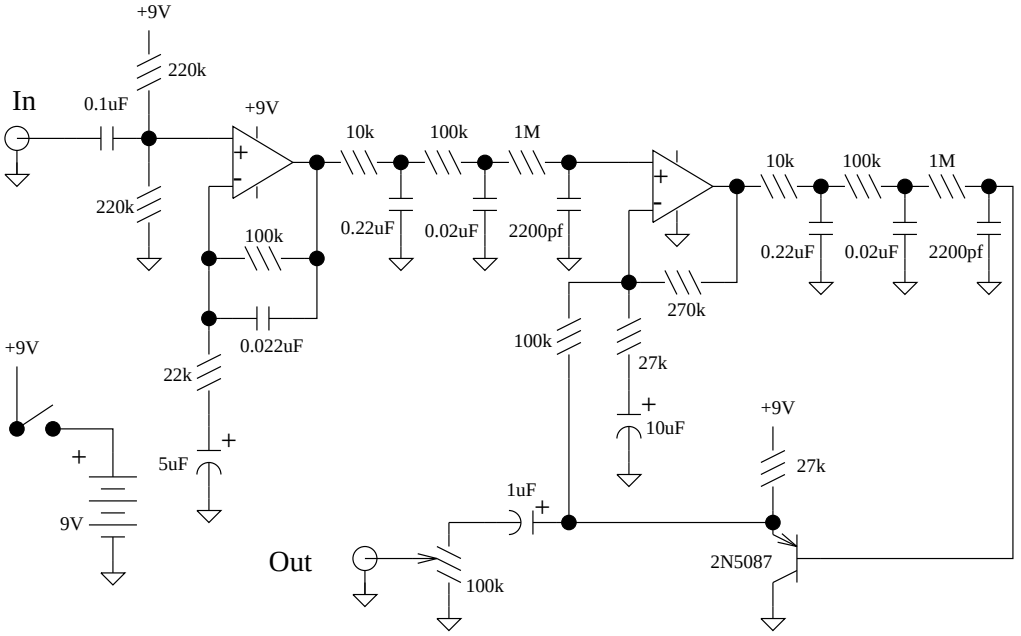

Hog's Foot (new)