Roland Double Beat

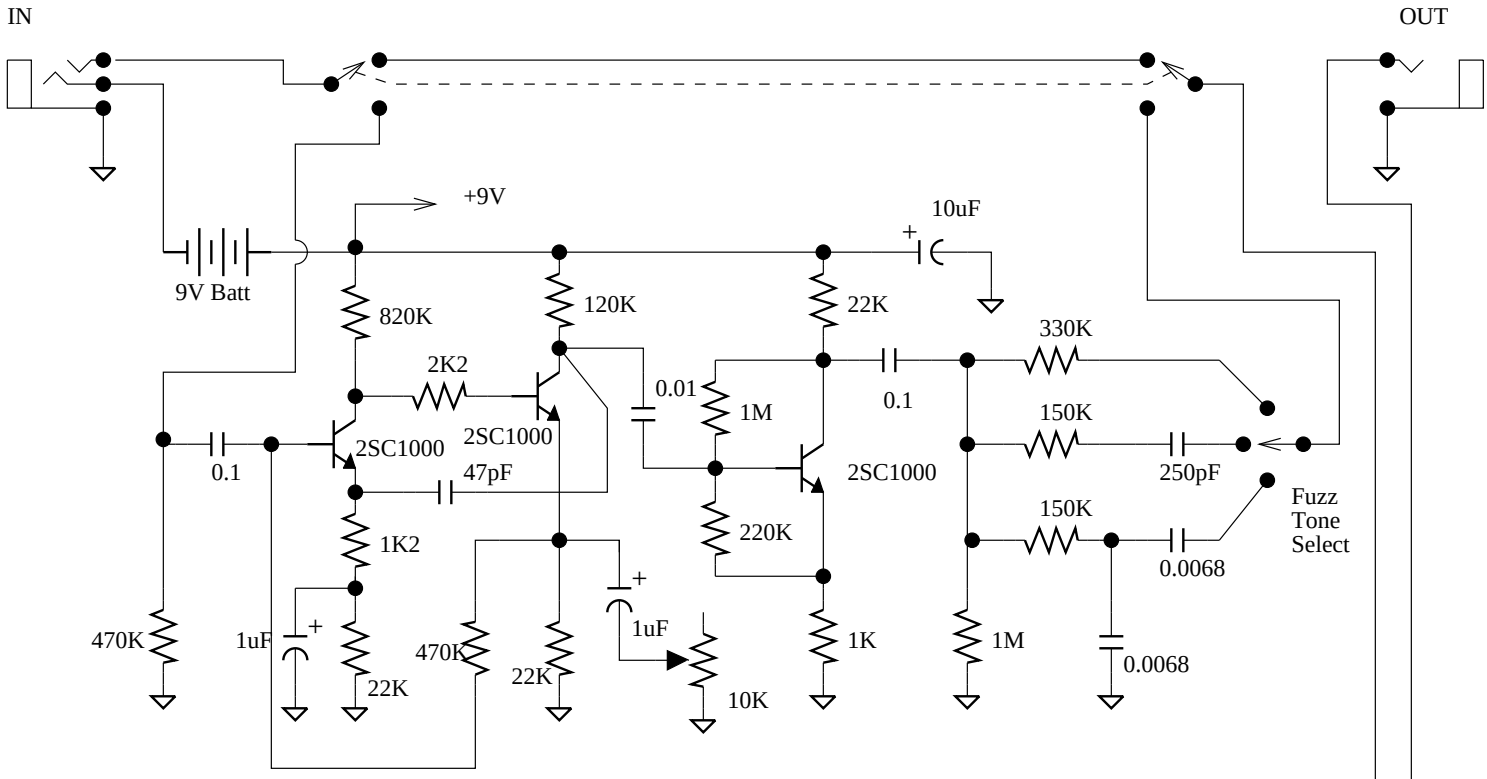

Fuzz Section

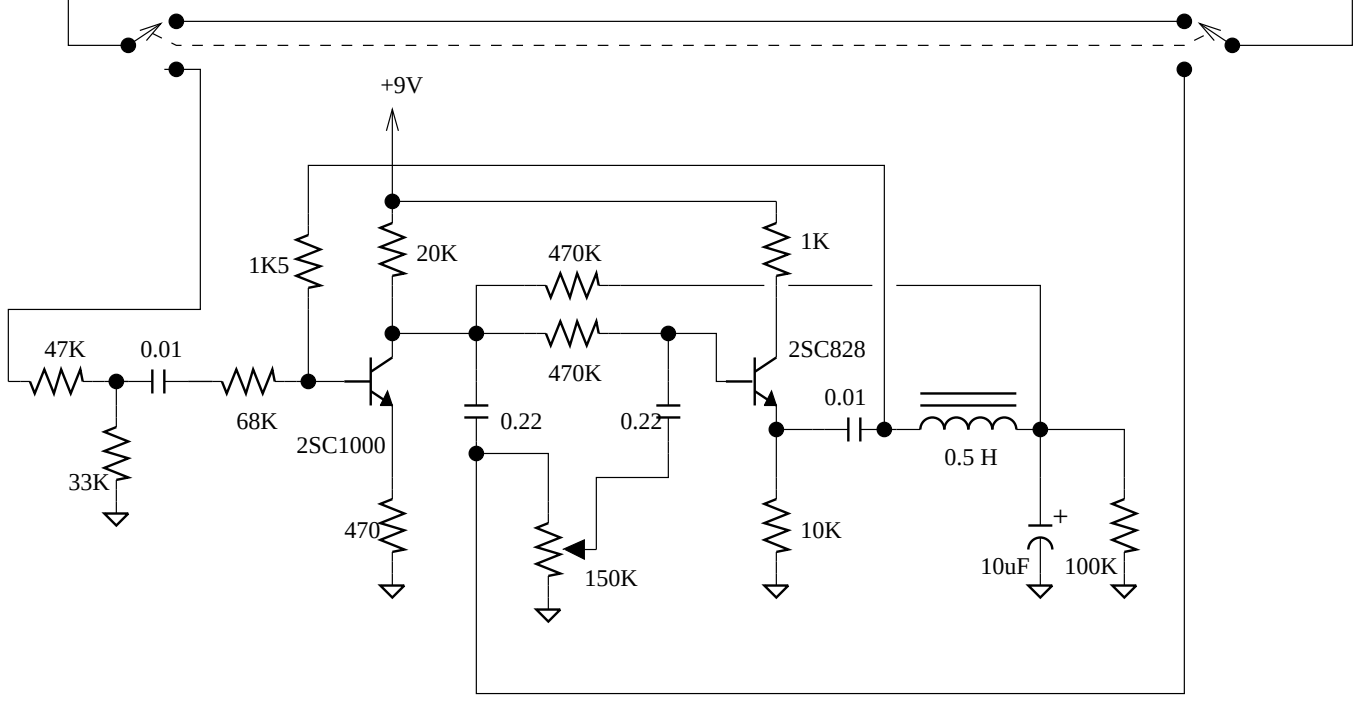

Wah Section

The Double Beat is another of those funky, funky Fuzz Wahs. The wah function is pretty standard, if a little quiet because of the resistive divider in front of the wah section cutting the signal down. The Fuzz secttion is pretty good, though. It has a good sound - no surprise as the first section is a lot like a Fuzz Face, but is followed up by yet another gain stage to distort even more. The three fuzz tone selections are RADICALLY different from each other.