Dual Pre-Amp & A/B Box

Designed by Rick Barker

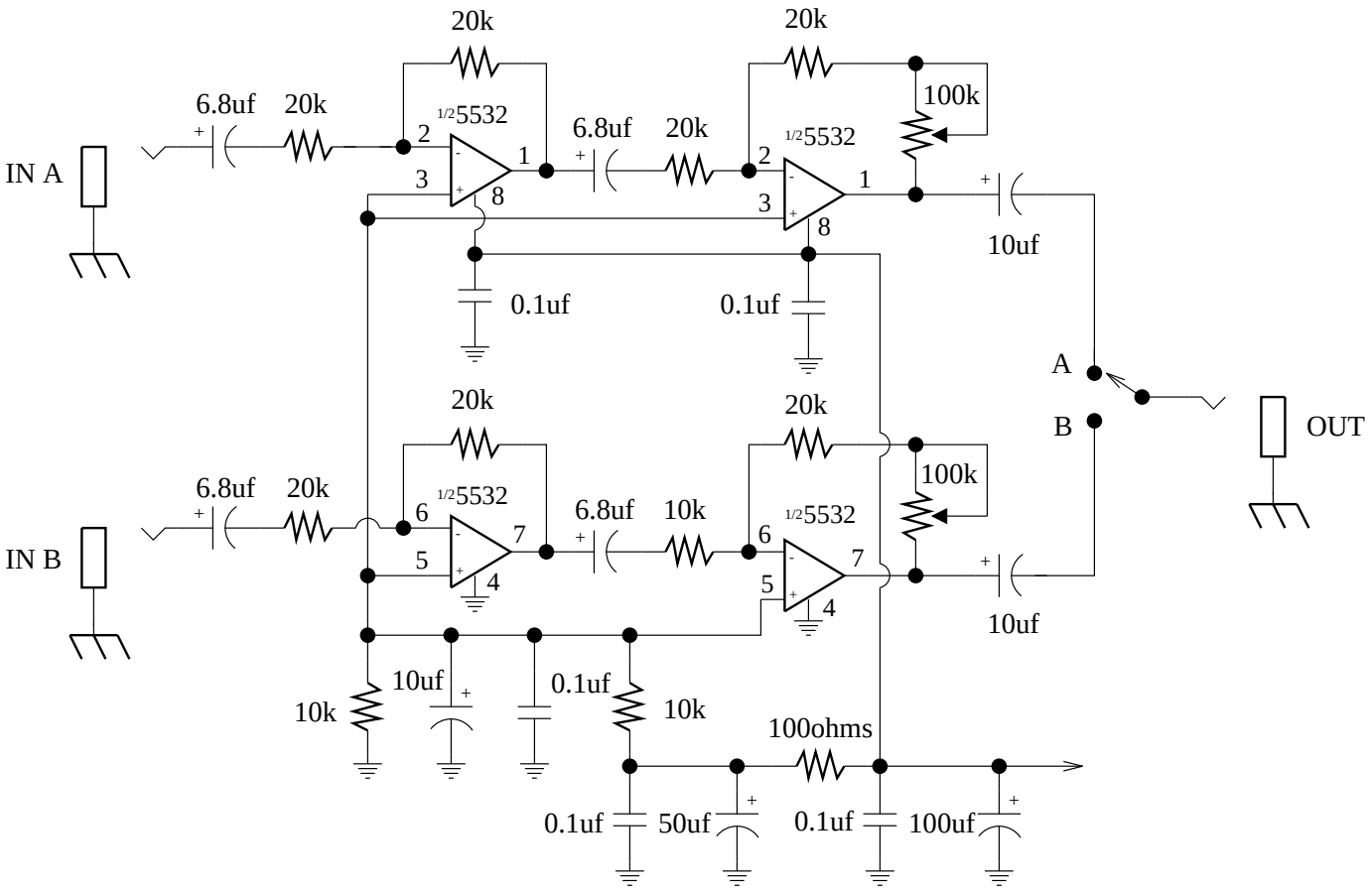

This low noise preamp & a/b box was originally designed for switching between different harmonica mics.