Dunlop Cry Baby Wah Wah

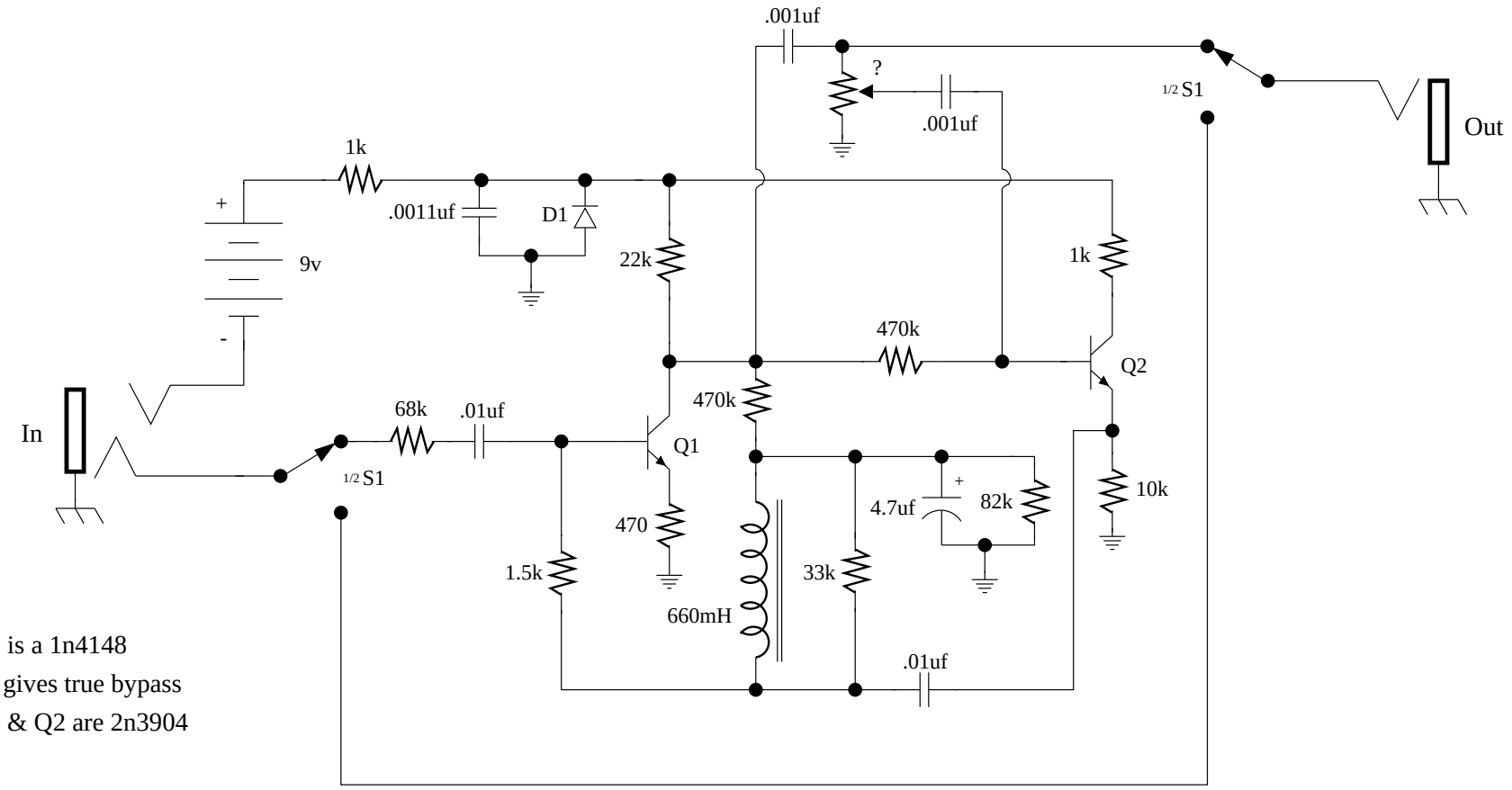

-D1 is a 1n4148

-S1 gives true bypass

-Q1 & Q2 are 2n3904