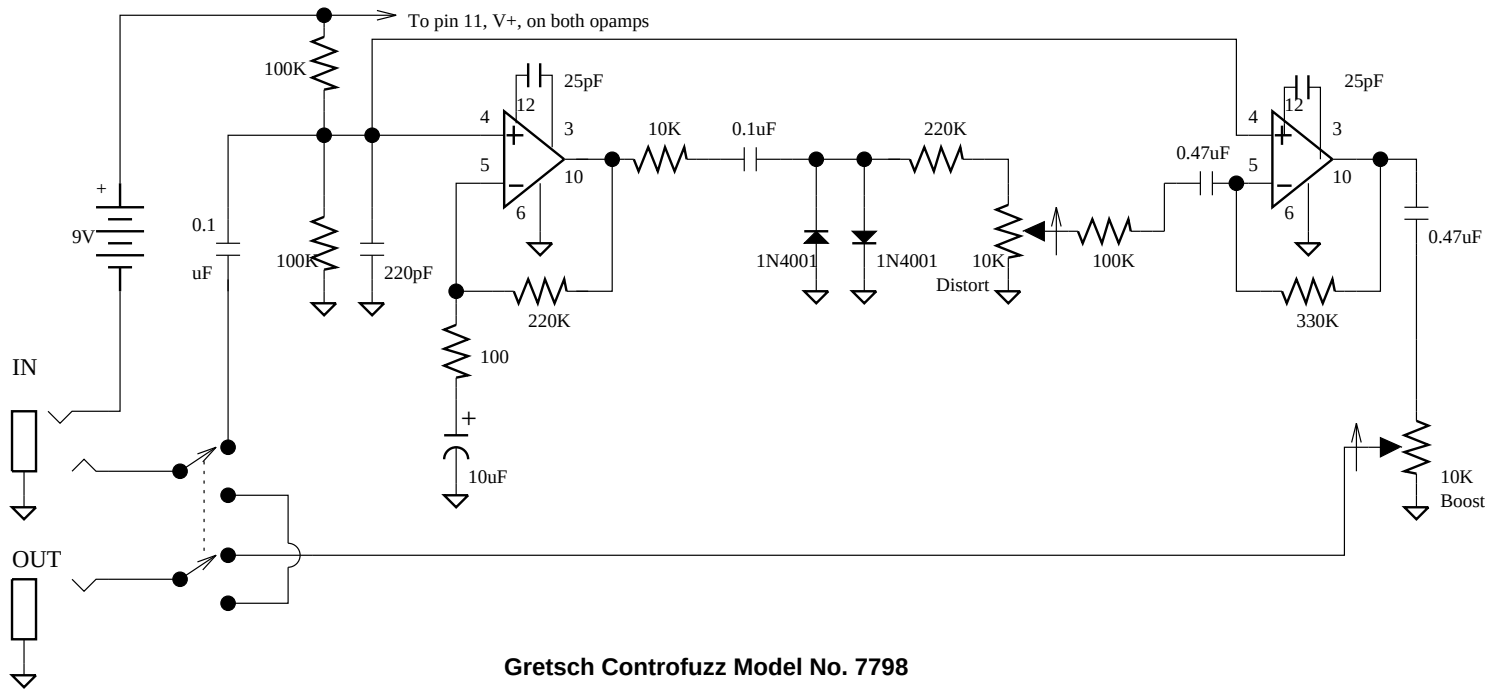

Gretsch Controfuzz Model No. 7798

The Gretsch Controfuzz is a variant of the op-amp-driving-diode-clipper type of distorter. The only unusual features are that the distortion is run at high boost all the time in the first opamp, and then subtracted from the dry signal in the second opamp. The amount of distortion mixed in is determined by the "Distort" control, and the overall volume level when the distortion is switched in is set by the "Boost" control.

The op amps are both type 748, which needs a compensation capacitor (25 pF in this case) to be stable. Other modern opamps should work.