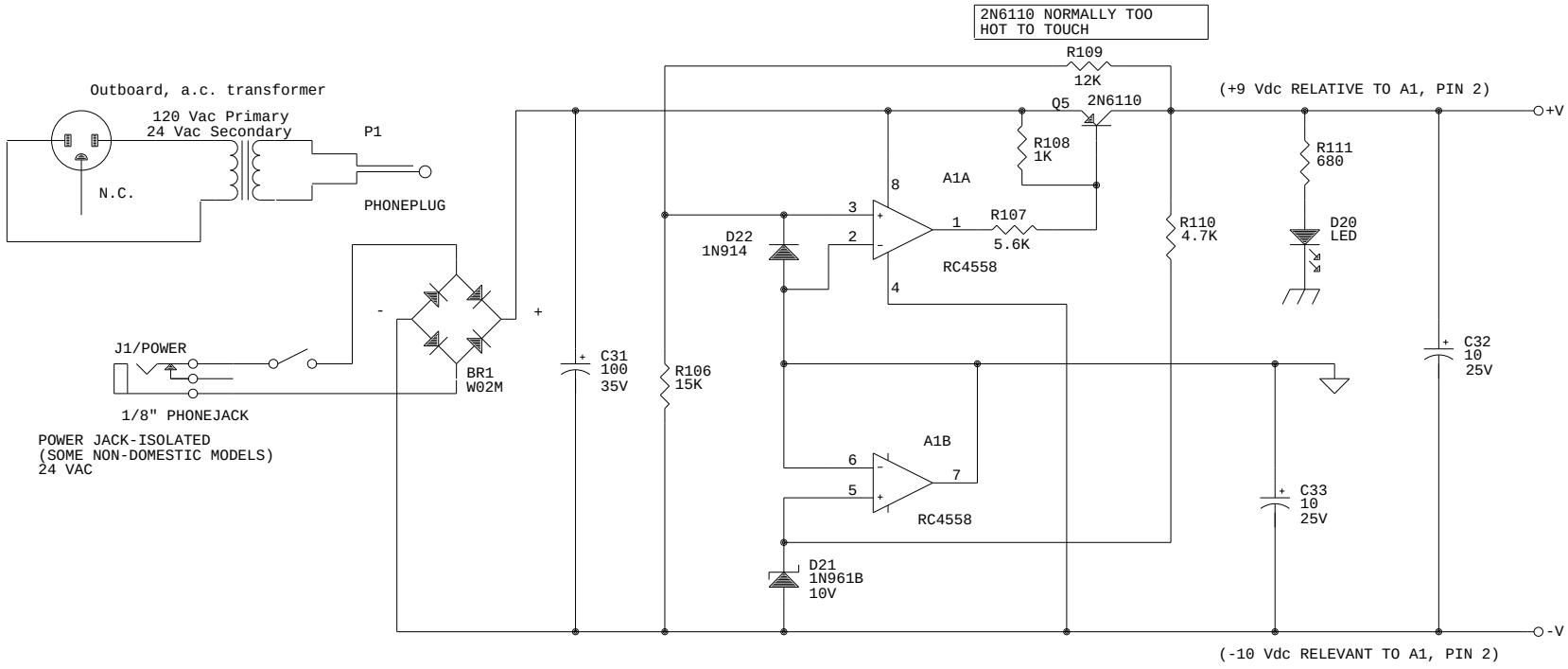

ELECTRO HARMONIX

DESIGNED BY: D.COCKERELL
REVISION: 12/12/78

Title
ELECTRO HARMONIX BASS MICRO SYNTHESIZER

Size	Document Number	REV
A	DRAWN BY: FABIAN P. HARTERY	1

Date: September 28, 1996 | Sheet 3 of 3