Frequency Brighteners

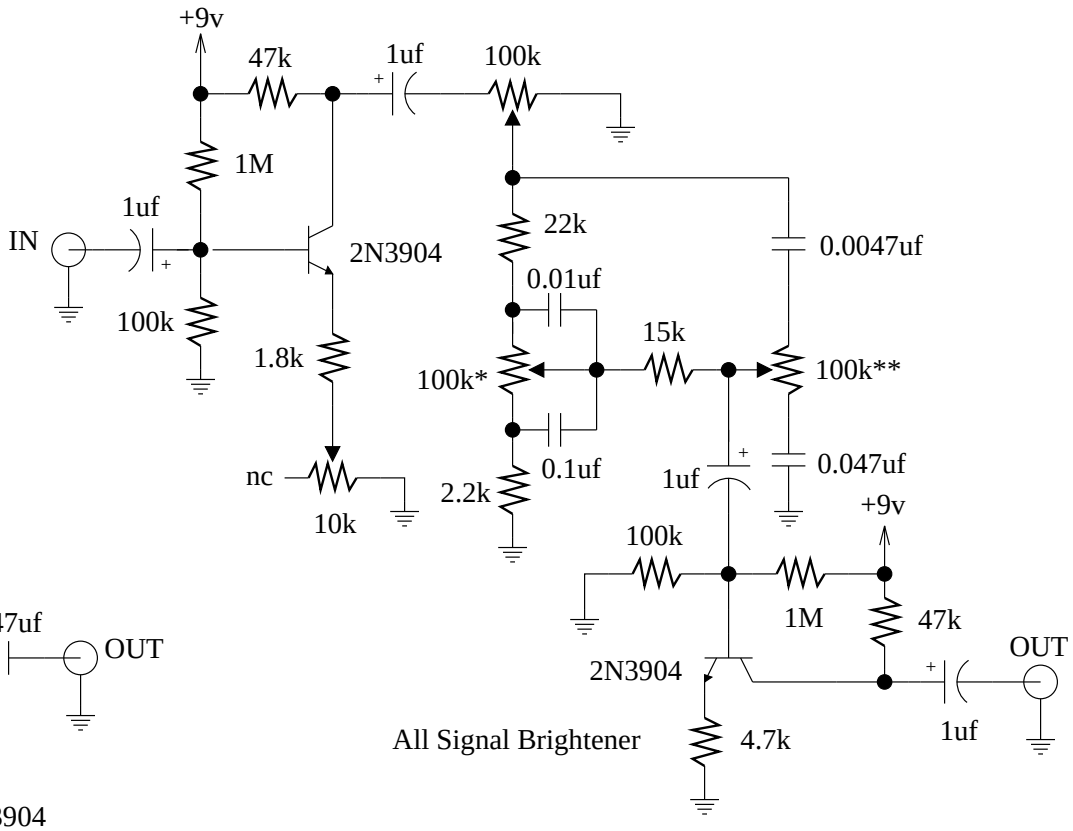

All Signal Brightener

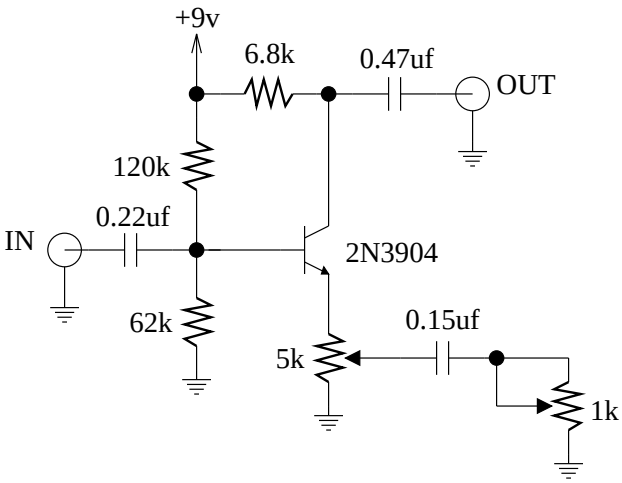

High Frequency Brightener

These two effect modules are not actually "guitar" effects per say, but rather synth modules that will work on any analog signal. The input and output impedances may need altering depending on your needs. The high frequency brightener is nothing more than a simple treble booster with a gain control (1k) and an intensity control (5k). The all signal brightener, however, has a seperate control for brightening the low end (100k*) as well as the high end of the frequency spectrum (100k**). The 10k trimmer is a set and forget type adjustment. Set it so the circuit breaks into oscillation, then back up the setting to the point where the oscillation just stops. These two modules were excerpted from Music Synthesizers - A Manual of Design and Construction by Delton Horn; TAB Books, 1984.