ELECTRO-HARMONIX BIG MUFF PI

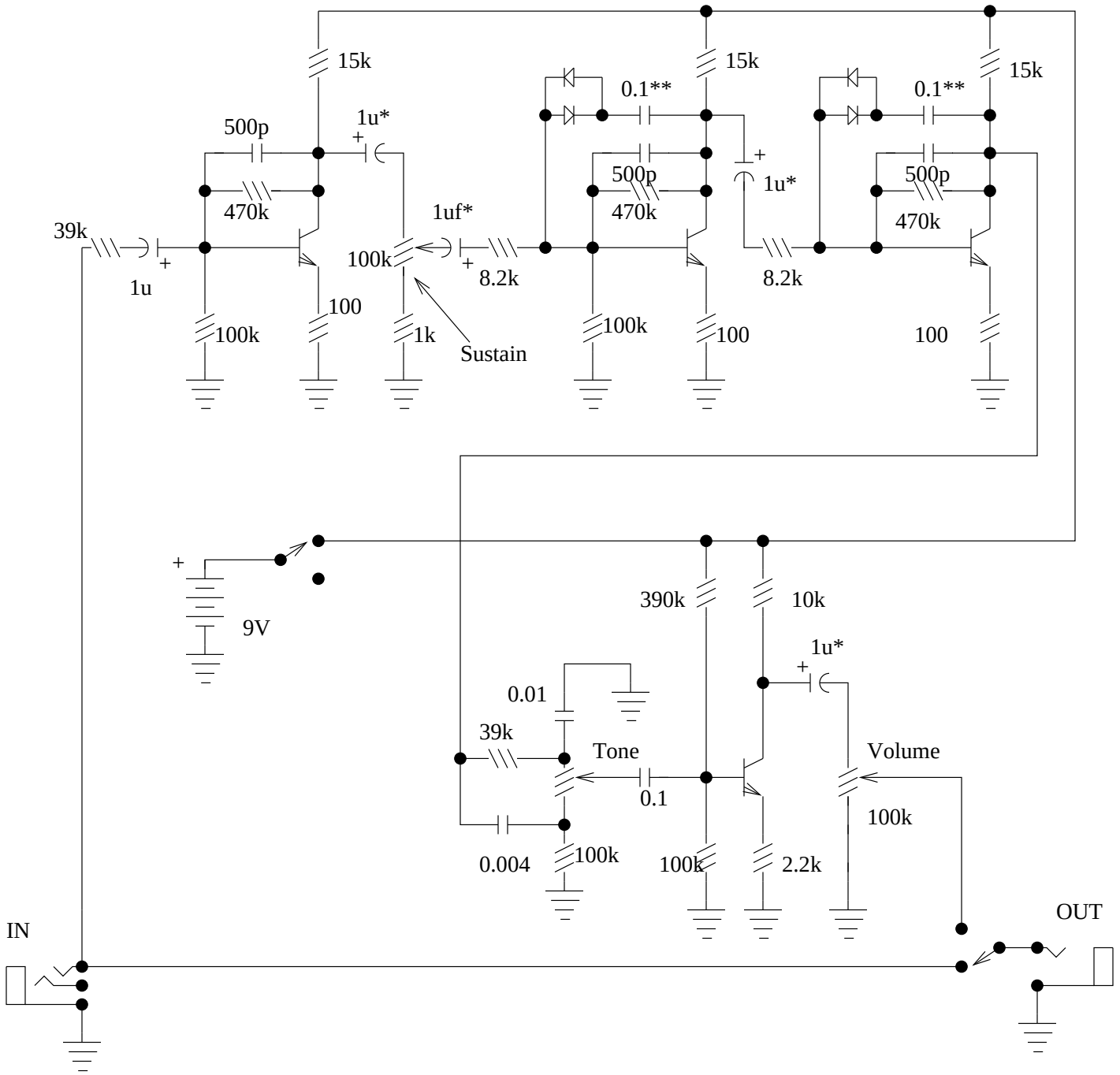

The EH Big Muff Pi would probably be improved by modern input-jack power switching and a DPDT bypass switch. This is the original schematic. The diode and transistor types are unknown. Probably any high gain NPN and 1N914s work. Coupling caps marked by a * have been reported to sound better if changed to 0.1uf as have the ** marked ones if changed to 1.0uf. The original transistors were marked SPT 87-103, and the original diodes were marked 525GY or 523GY (hard to read).