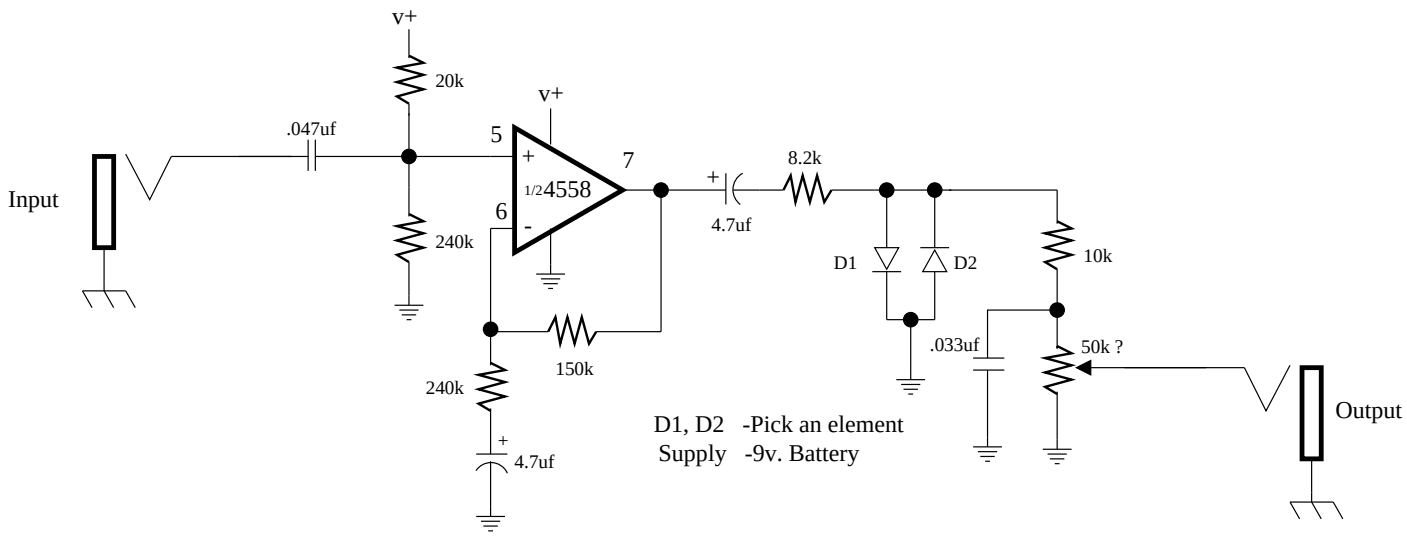Blue Clipper