Name: Axe Grinder	Manufacturer / Designer: PAiA Electronics	Revision: 10/28/95	Model # 5750

S1 - Cancel Effect
S2 - Full Intensity
5k Pot - Tone Control
500k Pot - Distortion Intensity
100k Pot (by tone) - Distortion Level
100k Pot (by IC2c) - Clean Level

S2 is a switch integrated into the 500k pot, and is wired such that rotating the pot fully will allow you flip the switch and kick in the full intensity of the distortion.
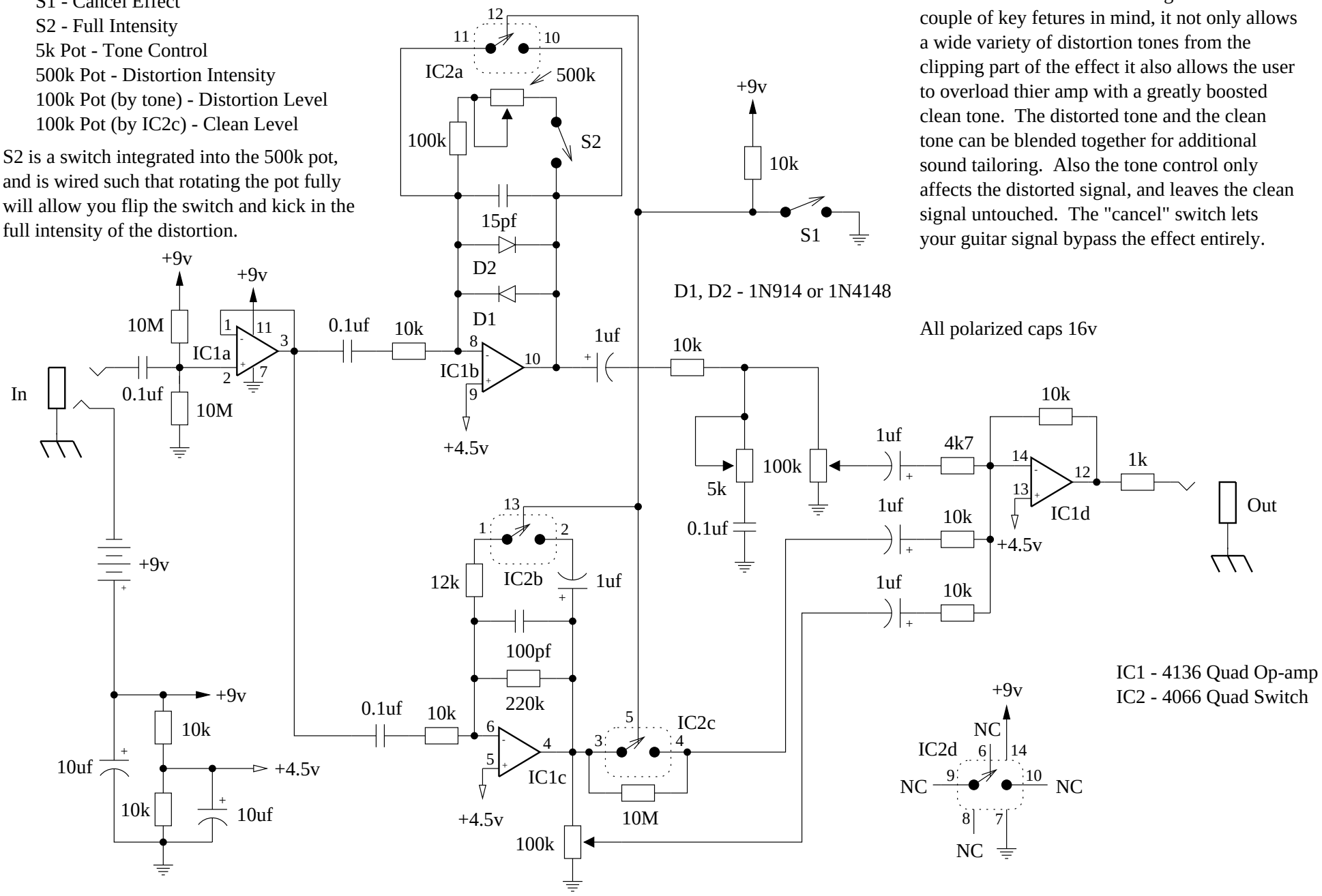
The Axe Grinder has been designed with a couple of key fetures in mind, it not only allows a wide variety of distortion tones from the clipping part of the effect it also allows the user to overload thier amp with a greatly boosted clean tone. The distorted tone and the clean tone can be blended together for additional sound tailoring. Also the tone control only affects the distorted signal, and leaves the clean signal untouched. The "cancel" switch lets your guitar signal bypass the effect entirely.