Angry Beard III

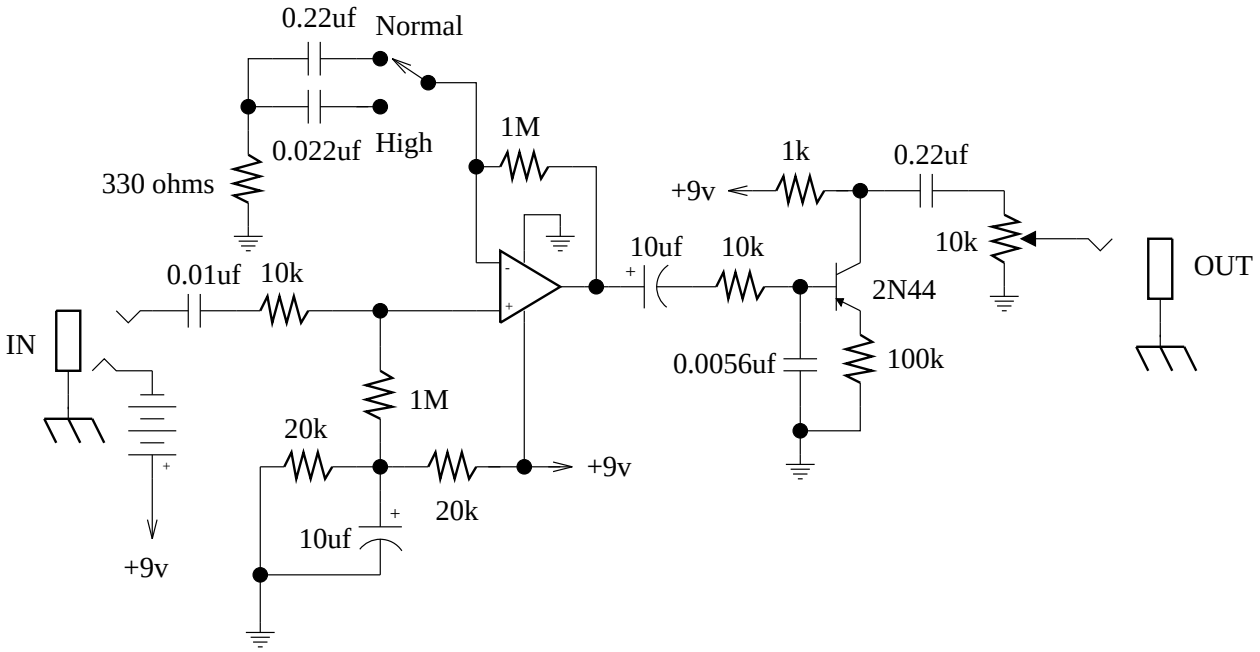

The op-amp can be any lownoise single op-amp, the original used a NE5534. The 2N44 could probably be replaced by other PNP germanium transitors with out much change in sound. The switching aspect has been left out of this schem, but you will probably want to add a bypass of some type to this effect. The emphasis switch chooses a tone flavor, this could be expanded to include a wider range of frequencies, but too small a cap value may cause oscillation. Any attempt at taming the internal gain of this effect has been left out, but could be easily added. This can be noisy depending on your rig, so a 10-15pf cap could be placed in the feedback loop of the op-amp if your concerned about too much squeaking.

-Jamie Heilman
n9343176@cc.wwu.edu