Simple 3 Band Tone Control

from Graff's Encylcopedia of Electronic Circuits / Popular Electronics

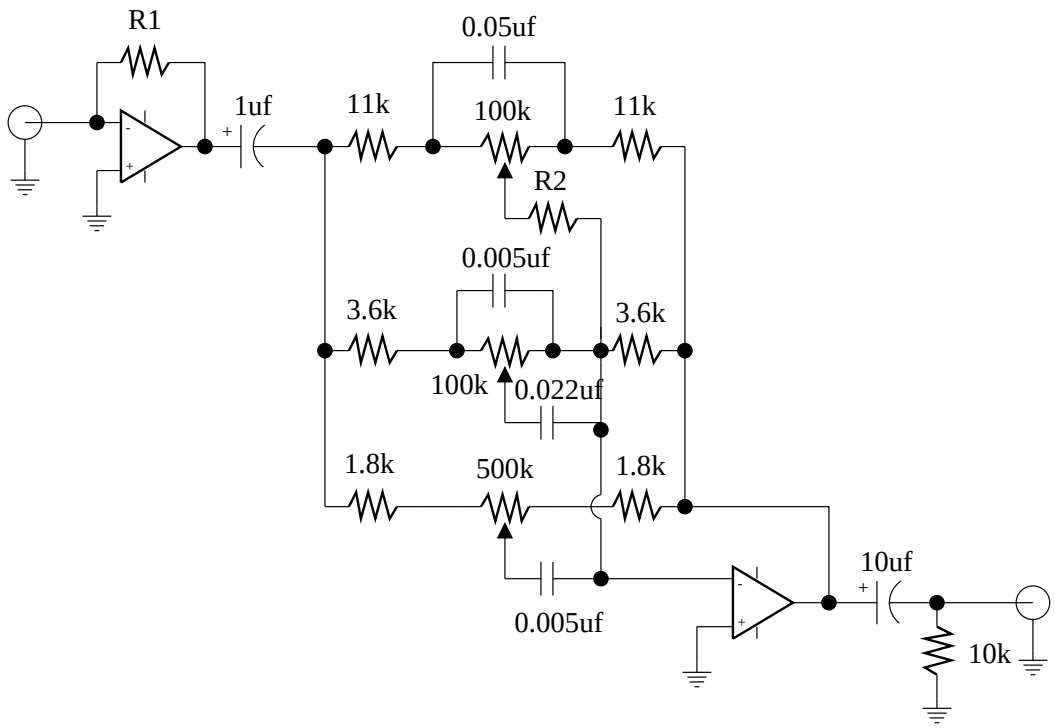

R1 is left up to the user depending on gain needs, R2 is unknown - experiment, the op-amps are not critical, any standard ones could be used. This circuit was originally intended for home audio use, but should be able to be hacked into an effect circuit with very minor modification.