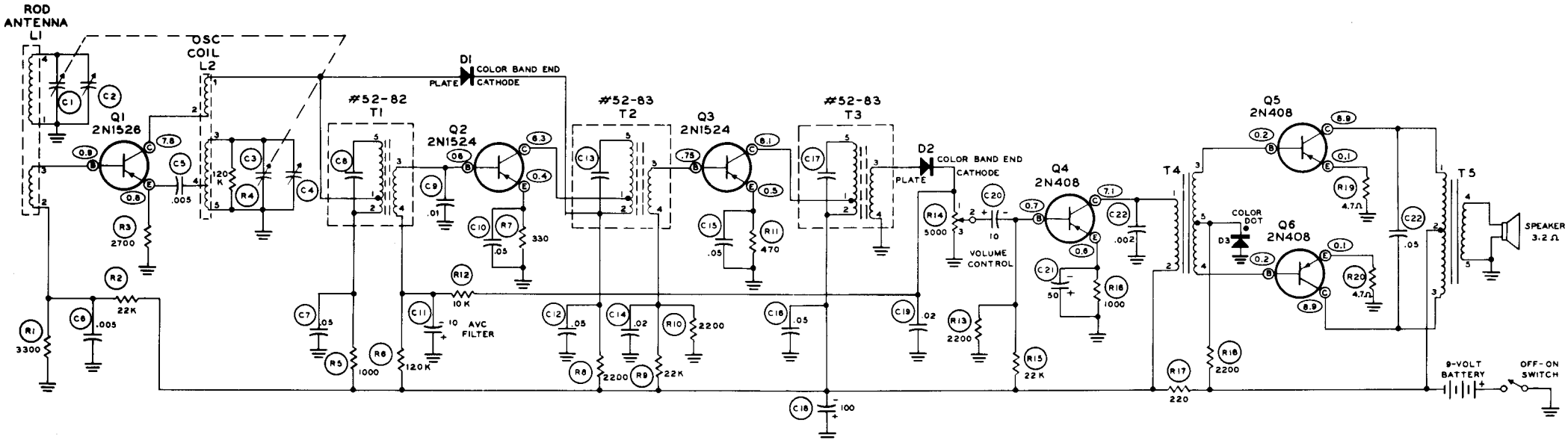

SCHEMATIC OF THE HEATHKIT PORTABLE TRANSISTOR RADIO MODEL GR-151A

ALL RESISTOR VALUES ARE IN Ω; K = 1000 Ω.

ALL RESISTORS ARE 1/2 WATT.

ALL CAPACITORS ARE IN μfd.

( ) INDICATES NEGATIVE DC VOLTAGE MEASUREMENT FROM POINT MARKED TO POSITIVE (+) BATTERY TERMINAL.

ALL VOLTAGES ARE MEASURED WITH AN 11 MEGOHM IMPEDANCE VTVM, WITH NO SIGNAL.