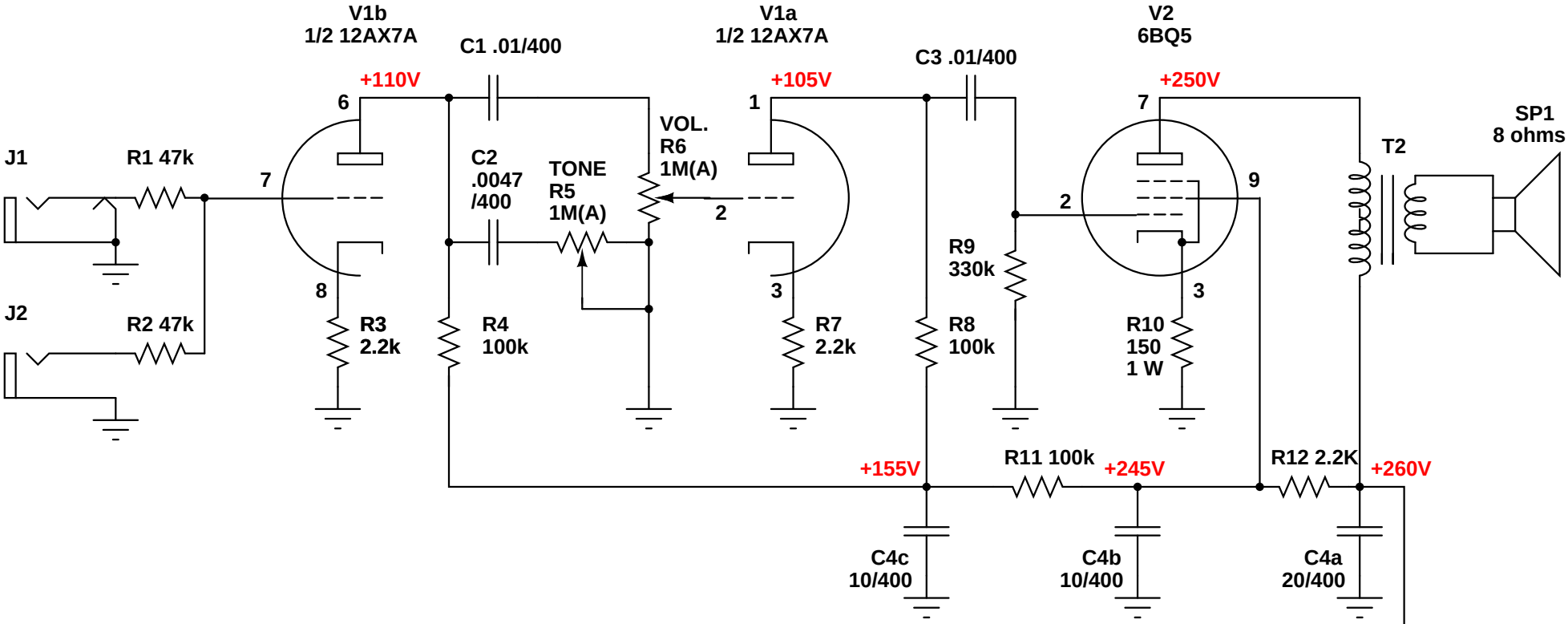

NOTES

1. Resistors 1/2 watt unless otherwise specified
2. Capacitors in uF unless otherwise specified
3. R12 is 1K on original schematic

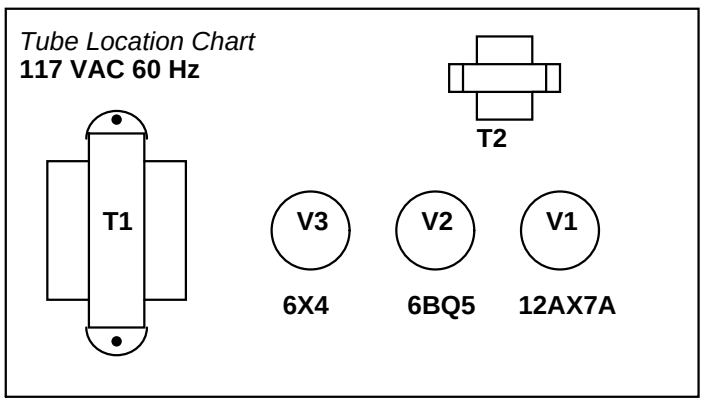

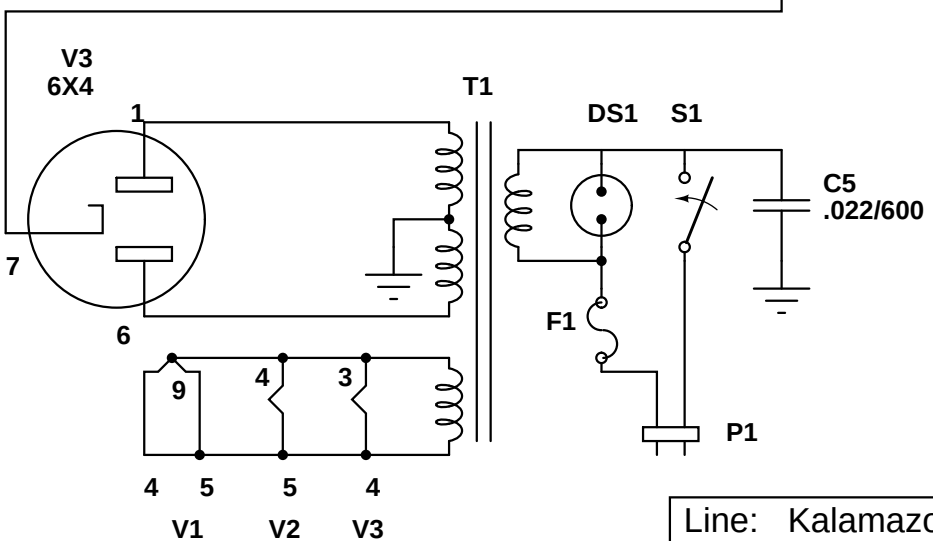

Line: Kalamazoo
Model: One
Schematic: Miles O'Neal
Date: 9 Feb 2000

Copyright 1999-2000, Miles O'Neal, Austin, TX. All rights reserved.