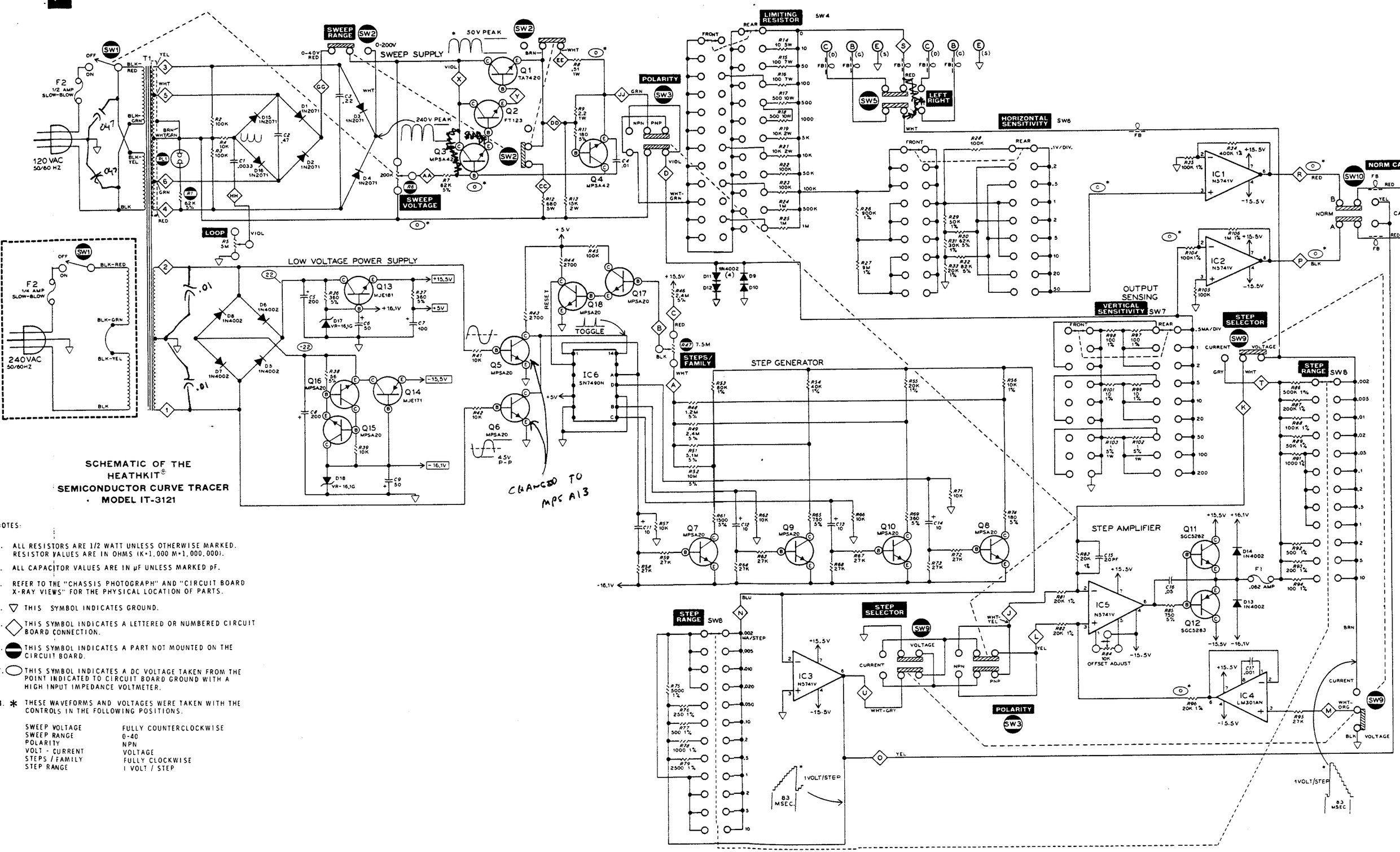

SCHEMATIC OF THE HEATHKIT® SEMICONDUCTOR CURVE TRACER · MODEL IT-3121

NOTES:

1. ALL RESISTORS ARE 1/2 WATT UNLESS OTHERWISE MARKED. RESISTOR VALUES ARE IN OHMS (K=1,000 M=1,000,000).
2. ALL CAPACITOR VALUES ARE IN μF UNLESS MARKED pF.
3. REFER TO THE "CHASSIS PHOTOGRAPH" AND "CIRCUIT BOARD X-RAY VIEWS" FOR THE PHYSICAL LOCATION OF PARTS.
4. ▽ THIS SYMBOL INDICATES GROUND.
5. ◇ THIS SYMBOL INDICATES A LETTERED OR NUMBERED CIRCUIT BOARD CONNECTION.
6. ⊖ THIS SYMBOL INDICATES A PART NOT MOUNTED ON THE CIRCUIT BOARD.
7. ⬭ THIS SYMBOL INDICATES A DC VOLTAGE TAKEN FROM THE POINT INDICATED TO CIRCUIT BOARD GROUND WITH A HIGH INPUT IMPEDANCE VOLTMETER.
8. * THESE WAVEFORMS AND VOLTAGES WERE TAKEN WITH THE CONTROLS IN THE FOLLOWING POSITIONS.

SWEEP VOLTAGE	FULLY COUNTERCLOCKWISE
SWEEP RANGE	0-40
POLARITY	NPN
VOLT - CURRENT	VOLTAGE
STEPS / FAMILY	FULLY CLOCKWISE
STEP RANGE	1 VOLT / STEP