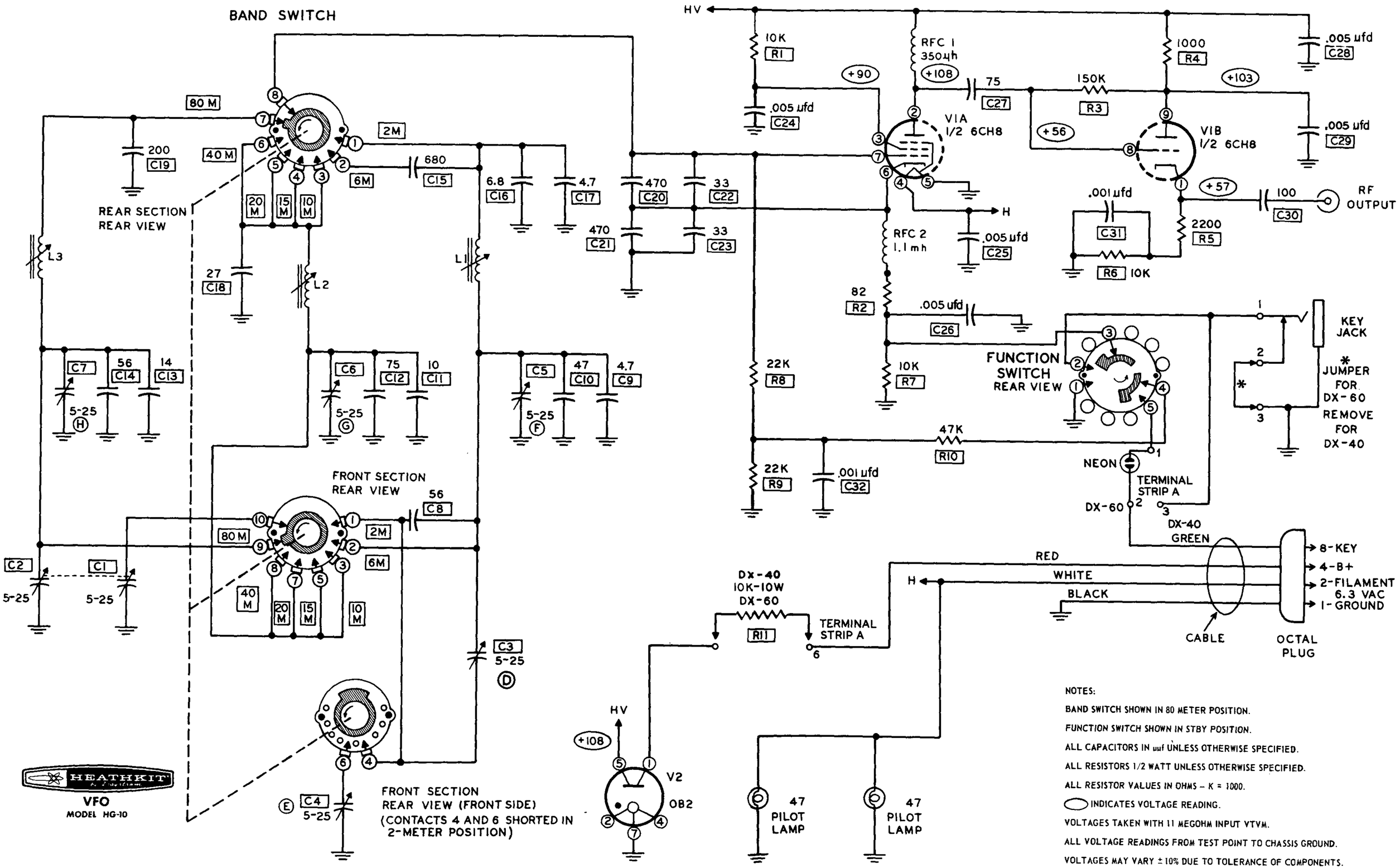

NOTES:

BAND SWITCH SHOWN IN 80 METER POSITION.

FUNCTION SWITCH SHOWN IN STBY POSITION.

ALL CAPACITORS IN µuf UNLESS OTHERWISE SPECIFIED.

ALL RESISTORS 1/2 WATT UNLESS OTHERWISE SPECIFIED.

ALL RESISTOR VALUES IN OHMS – K = 1000.

⬭ INDICATES VOLTAGE READING.

VOLTAGES TAKEN WITH 11 MEGOHM INPUT VTVM.

ALL VOLTAGE READINGS FROM TEST POINT TO CHASSIS GROUND.

VOLTAGES MAY VARY ± 10% DUE TO TOLERANCE OF COMPONENTS.