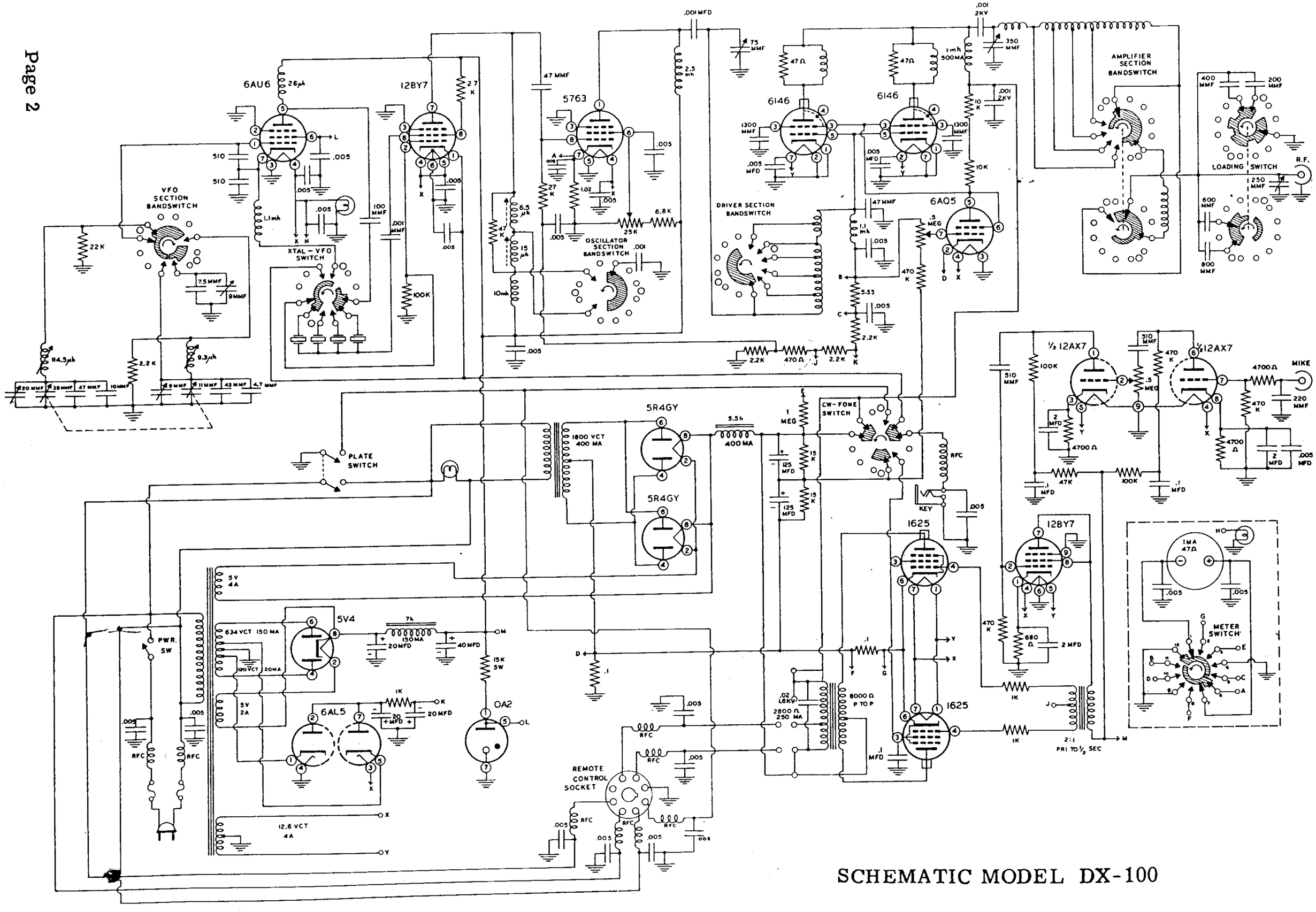


SCHEMATIC MODEL DX-100